SUPERMICRO®
X10DAL-i
Quick Reference Guide Rev 1.0c

Contact Information
- Website: www.supermicro.com
- General Information: marketing@supermicro.com
- Tech Support: support@supermicro.com
- Phone: +1 (408) 503-8000, Fax: +1 (408) 503-8008

For your system to work properly, please download appropriate drivers/images/user's manual from the links below:
- Manuals: http://www.supermicro.com/support/manuals/
- Drivers & Utilities: http://www.supermicro.com/wftp
- Safety: http://www.supermicro.com/about/policies/safety_information.cfm

Package Contents
- One (1) Supermicro Motherboard
- Six (6) SATA Cables (CBL-0044L)
- One (1) I/O Shield (MCP-260-00077-0N)
- One (1) Quick Reference Guide (MNL-1701-QRG)

WARNING: This product can expose you to chemicals including lead, known to the State of California to cause cancer and birth defects or other reproductive harm. For more information, go to www.P65Warnings.ca.gov.

Motherboard Layout and Features

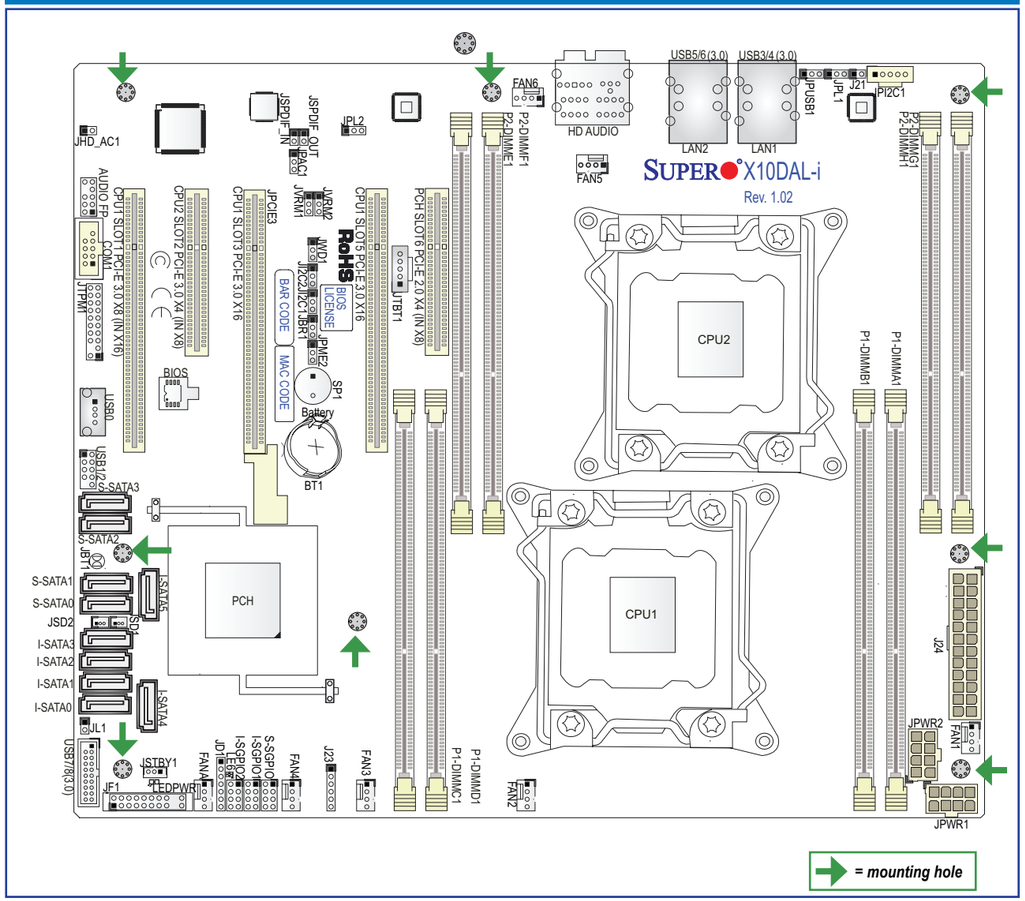

CPU Installation

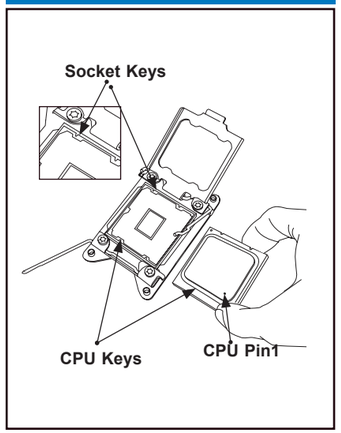

Heatsink Installation

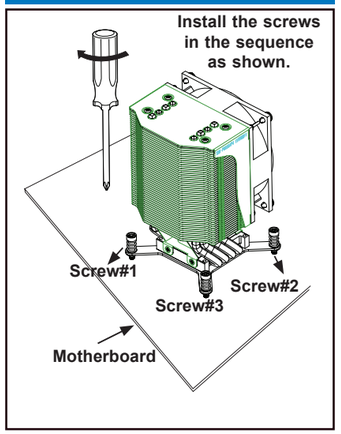

Front Control Panel (JF1)

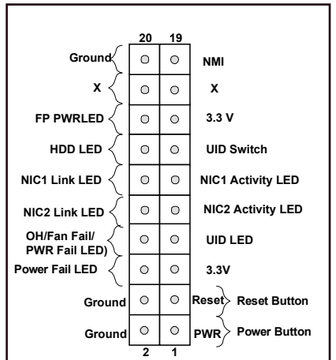

Note: Graphics shown in this quick reference guide are for illustration only. Your components may or may not look exactly the same as the drawings shown in this guide.

Jumpers, Connectors, and LED Indicators

Jumpers

Jumper	Description	Default Setting
JBT1	Clear CMOS	See Chapter 2
JI²C1/JI²C2	SMBus to PCI-E Slots	Pins 2-3 (Disabled)
JPAC1	Audio Enable	Pins 1-2 (Enabled)
JPL1/JPL2	GLAN1/GLAN2 Enable/Disable	Pins 1-2 (Enabled)
JPME2	ME (Manufacture) Mode Select	Pins 1-2 (Normal)
JPUSB1	USB 1/2 Wake-up Enable	Pins 1-2 (Enabled)
JWD1	Watch Dog	Pins 1-2 (Reset)
J21	LAN Controller EEPROM Update	Open (Disabled)

Connectors

Connectors	Description
Audio_FP	Audio connector for front access
HD Audio	5.1 HD (6-channel High-Definition) + SPDIF audio connector
BT1	Onboard CMOS battery (See Chapter 3 for Used Battery Disposal)
COM1	Serial port header
CPU1 Slot1	PCI-E 3.0 x 8 in 16 slot
CPU2 Slot2	PCI-E 3.0 x 4 in 8 slot (This slot is available when CPU2 is installed.)
CPU1Slot3/Slot5	PCI-E 3.0 x16 slots
PCH Slot6	PCI-E 2.0 x4 in x8 slot (See the note below for Thunderbolt AOC support.)
FAN1-6, FANA	CPU/System fan headers
J24	ATX 24-pin power connector
JD1	Speaker/Power LED indicator
JF1	Front control panel header
JL1	Chassis intrusion header
JPI2C1	Power supply SMBbus I²C header
JPWR1/JPWR2	12V 8-Pin Power Connectors
JSD1/JSD2	SATA DOM (Device_On_Module) power Connection headers 1/2
JSPDIF_In	SPDIF_(Sony/Philips Digital Interface)_In/Out header
JSPDIF_Out	SPDIF_(Sony/Philips Digital Interface)_Out header
JSTBY1	Standby power header
JTBT1	GPIO (General-Purpose I/O) header for Thunderbolt add-on card (See the note on page 1-5 for Thunderbolt AOC support.)
JTPM1	TPM (Trusted Platform Module)/Port 80 header
LAN1/LAN2	Gigabit Ethernet ports 1/2
I-SATA0-5	Serial_Link ATA (SATA 3.0) connections 0-5 supported by Intel PCH (I-SATA4/5 support Supermicro SuperDOMs [Devices-on-Module] with power pins built-in)
S-SATA 0-3	Serial_Link ATA (SATA 3.0) connections 0-3 supported by Intel SCU
SP1	Onboard buzzer (internal speaker)
I-SGPIO 1/2, S-SGPIO	Serial-Link General_Purpose IO (SGPIO) headers (I-SGPIO 1: I-SATA0-3, I-SGPIO 2: I-SATA4/5, S-GPIO: S-SATA0-3)
USB 3/4 (3.0)	Rear USB 3.0 ports 3/4 on the IO backpanel
USB 1/2 (2.0)	Front USB 2.0 ports 1/2 for front access
USB 5/6 (3.0)	Rear USB 3.0 ports 5/6 on the IO backpanel
USB 7/8 (3.0)	Front-accessible USB 3.0 connections 7/8
USB 0 (2.0)	Type A USB 2.0 USB connection header

LED Indicators

LED	Description	State
LE6	Power Good LED	Green: All onboard power VRMs Normal
LEDPWR	Power LED	Solid On: Power On, Blinking: Suspend to RAM

Note: Refer to Chapter 1 of the user manual for detailed information on jumpers, connectors, and LED indicators.

CPU Support

Dual Intel® E5-2600v3/v4 Series Processors (Socket R3-LGA 2011); each processor supports dual full-width Intel QuickPath Interconnect (QPI) links (of up to 9.6 GT/s one direction per QPI)

Memory Support

This motherboard supports up to 1024 GB of Load Reduced (LRDIMM) and up to 256 GB of Registered (RDIMM) DDR4 (288-pin) ECC 2400/2133/1866/1600 MHz memory modules in 8 slots. Memory speed support is dependent on the CPUs installed in the motherboard. For the latest memory updates, please refer to our website at http://www.supermicro.com/products/motherboard.

Populating RDIMM/LRDIMM DDR4 Memory Modules for the E5-2600v3-based Motherboard

Type	Ranks Per DIMM and Data Width	DIMM Capacity (GB)		Speed (MT/s); Voltage (V); Slot Per Channel (SPC) and DIMM Per Channel (DPC)
				1 Slot Per Channel
				1DPC
		4Gb	8Gb	1.2V
RDIMM	SRx4	8GB	16GB	2133
RDIMM	SRx8	4GB	8GB	2133
RDIMM	DRx8	8GB	16GB	2133
RDIMM	DRx4	16GB	32GB	2133
LRDIMM	QRx4	32GB	64GB	2133
LRDIMM 3DS†	8Rx4	64GB	128GB	2133

Populating RDIMM/LRDIMM DDR4 Memory Modules for the E5-2600v4-based Motherboard

Type	Ranks Per DIMM and Data Width	DIMM Capacity (GB)		Speed (MT/s); Voltage (V); Slot Per Channel (SPC) and DIMM Per Channel (DPC)
				1 Slot Per Channel
				1DPC
		4Gb	8Gb	1.2V
RDIMM	SRx4	8GB	16GB	2400
RDIMM	SRx8	4GB	8GB	2400
RDIMM	DRx8	8GB	16GB	2400
RDIMM	DRx4	16GB	32GB	2400
LRDIMM	QRx4	32GB	64GB	2400
LRDIMM 3DS	8Rx4	64GB	128GB	2400

DIMM Memory Installation

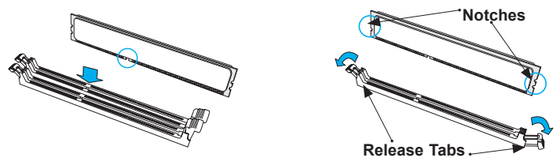

Back Panel I/O Connectors

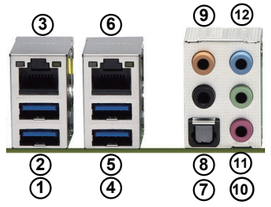

1.	Rear USB 3.0 Port 3
2.	Rear USB 3.0 Port 4
3.	Gigabit LAN Port 1
4.	Rear USB 3.0 Port 5
5.	Rear USB 3.0 Port 6
6.	Gigabit LAN Port 2
7.	SPDIF_Out
8.	Surround_Out
9.	CEN/LFE_Out
10.	Mic_In
11.	Line-Out
12.	Line_In

Note: Refer to Chapter 2 of the user manual for detailed information on memory support and CPU/motherboard installation instructions.

MNL-1701-QRG-10c

© 2018 Supermicro Computer Inc. All rights reserved. Reproduction of this document whether in part or in whole is strictly prohibited without Supermicro's written consent. All Trademarks are property of their respective entities. All information provided is deemed accurate at the time of printing; however, it is not guaranteed.