# AG 50 CORE ONLY

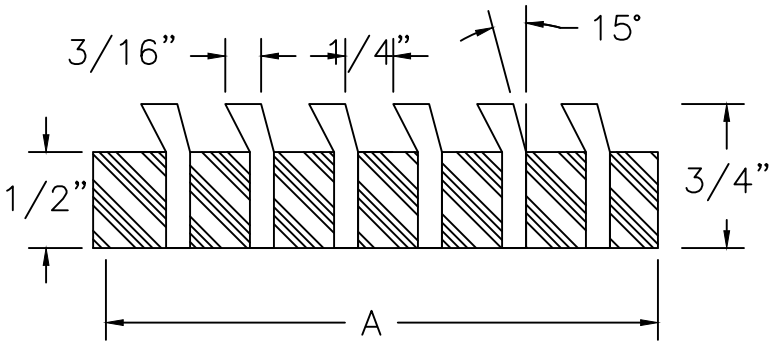


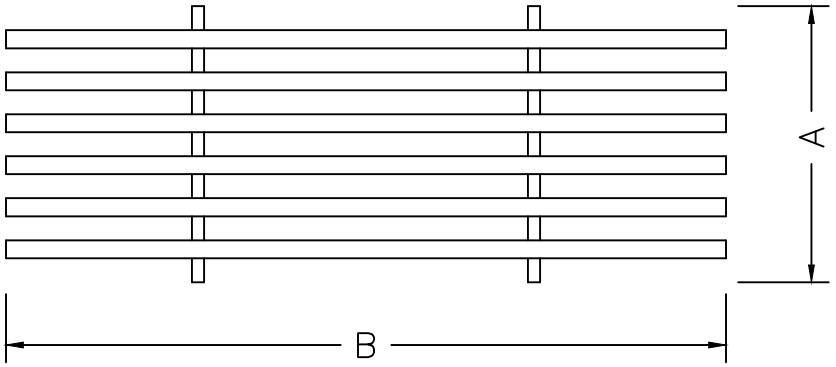


NOTE:

## REQUIREMENTS

MATERIAL:

THICKNESS: 3/4" depth

FINISH:

MOUNTING: CORE ONLY

| | SIZES (Opening) | |
|---|---|---|
| QTY | A | B |
| | | |
| | | |
| | | |
| | | |
| | | |
| | | |
| | | |
| | | |
| | | |
| | | |
| | | |
| | | |
| | | |
| | | |
| | | |
| | | |
| | | |
| | | |
| | | |
| | | |

| DATE | APROVED |
|---|---|
| – | |

JOB #

QUOTE #

**ARCHITECTURAL GRILLE**

42 SECOND AVENUE
BROOKLYN, NY 11215
WWW.ARCHGRILLE.COM

| CUSTOMER | SIZE | REV |
|---|---|---|
| | A | – |

| DESCRIPTION | SCALE | SHEET |
|---|---|---|
| AG50–CORE | 1"=1" | 1 |

# AG 50 A FRAME

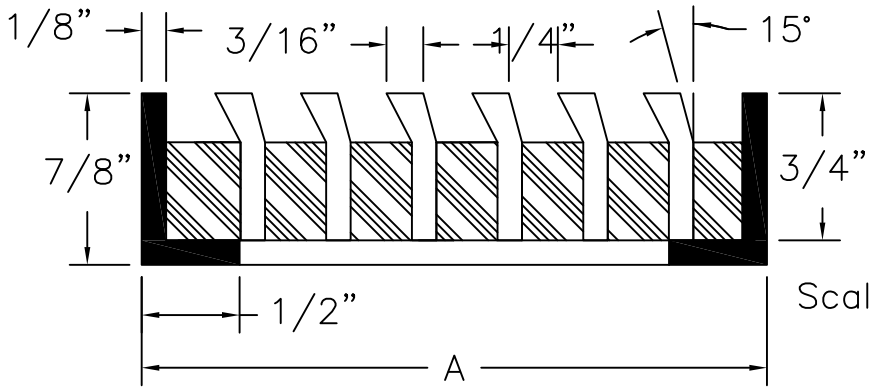


Scale 1:1

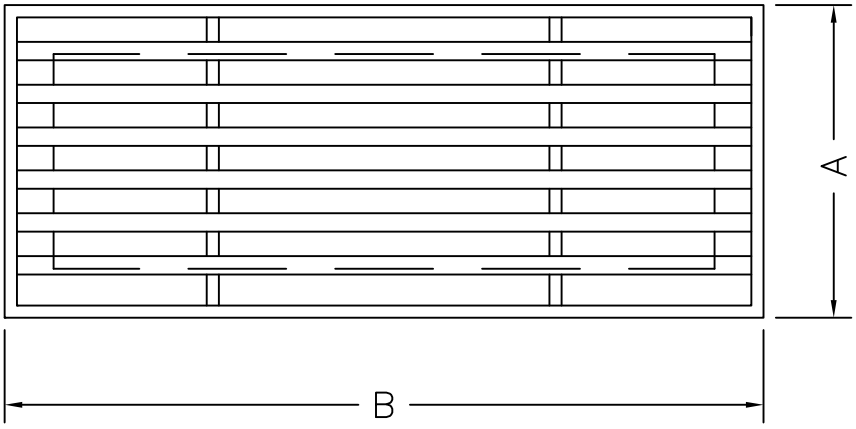


Scale 1:2

NOTE:

**ARCHITECTURAL GRILLE**

42 SECOND AVENUE
BROOKLYN, NY 11215
WWW.ARCHGRILLE.COM

| CUSTOMER | SIZE | REV |
|---|---|---|
| | A | – |

| DESCRIPTION | SCALE | SHEET |
|---|---|---|
| AG50–A.FRAME | 1"=1" | 2 |

## REQUIREMENTS

MATERIAL:

THICKNESS: 7/8" depth

FINISH:

MOUNTING: A FRAME

| | SIZES (Opening) | |
|---|---|---|
| QTY | A | B |
| | | |
| | | |
| | | |
| | | |
| | | |
| | | |
| | | |
| | | |
| | | |
| | | |
| | | |
| | | |
| | | |
| | | |
| | | |
| | | |
| | | |
| | | |
| | | |

| DATE | APROVED |
|---|---|
| – | |

JOB #

QUOTE #

# AG 50 B FRAME

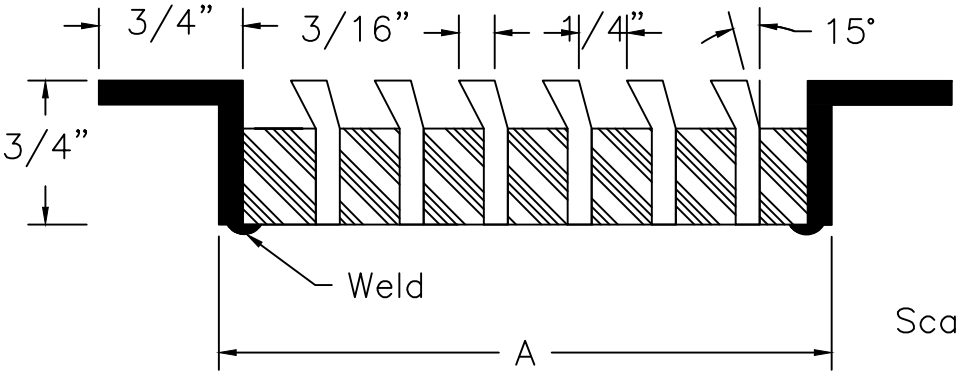


Scale 1:1

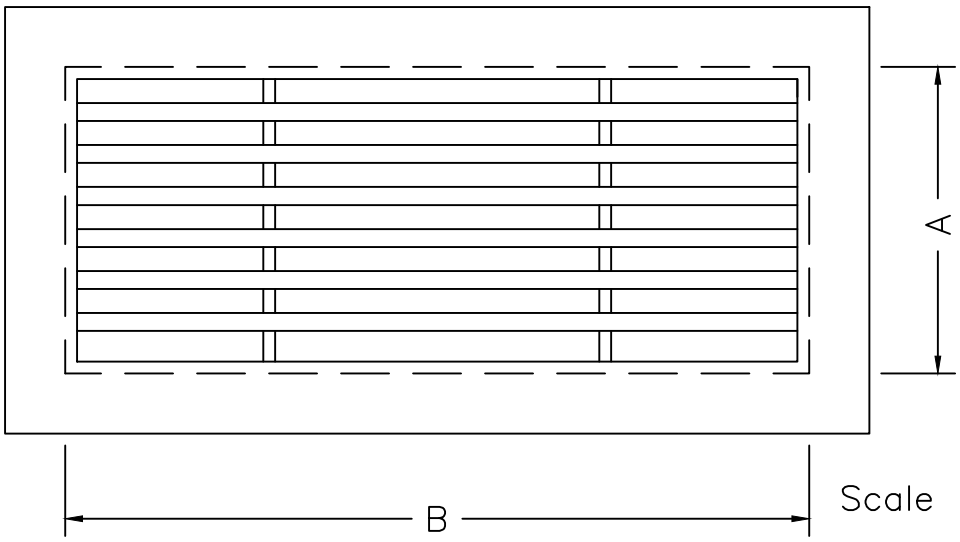


Scale 1:2

NOTE:

**ARCHITECTURAL GRILLE**

42 SECOND AVENUE
BROOKLYN, NY 11215
WWW.ARCHGRILLE.COM

| CUSTOMER | SIZE | REV |
|---|---|---|
| | A | – |

| DESCRIPTION | SCALE | SHEET |
|---|---|---|
| AG50–B.FRAME | 1"=1" | 3 |

## REQUIREMENTS

MATERIAL:

THICKNESS: 3/4" depth

FINISH:

MOUNTING: B FRAME

| | SIZES (Opening) | |
|---|---|---|
| QTY | A | B |
| | | |
| | | |
| | | |
| | | |
| | | |
| | | |
| | | |
| | | |
| | | |
| | | |
| | | |
| | | |
| | | |
| | | |
| | | |
| | | |
| | | |
| | | |
| | | |

| DATE | APROVED |
|---|---|
| – | |

JOB #

QUOTE #

# AG 50 C FRAME

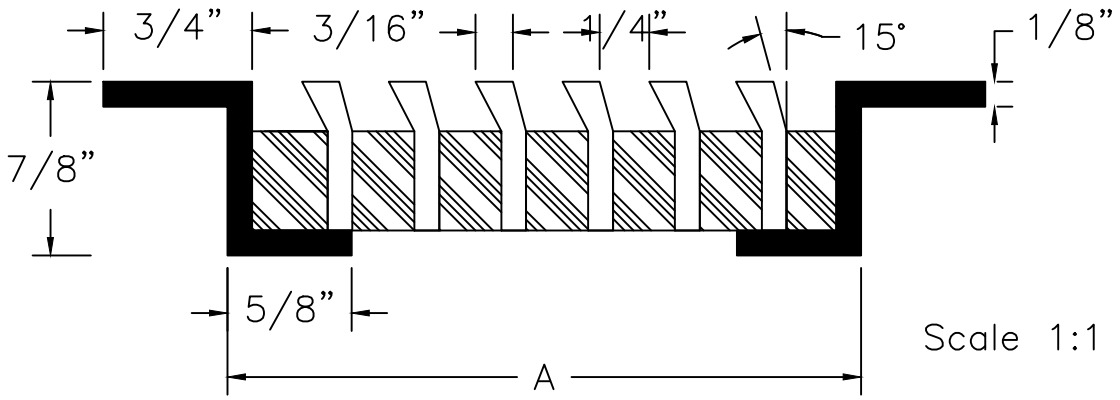


Scale 1:1

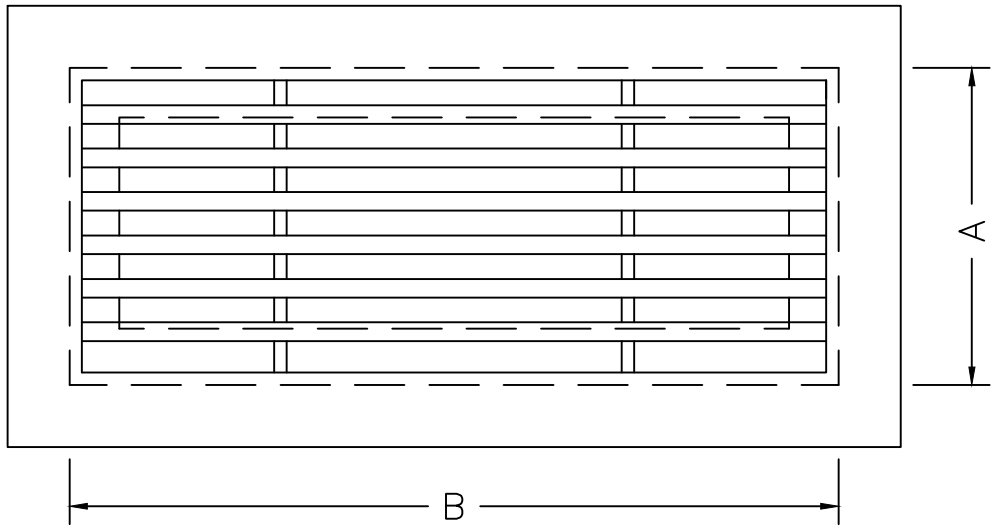


Scale 1:2

NOTE:

**ARCHITECTURAL GRILLE**

42 SECOND AVENUE
BROOKLYN, NY 11215
WWW.ARCHGRILLE.COM

| CUSTOMER | SIZE | REV |
|---|---|---|
| | A | – |

| DESCRIPTION | SCALE | SHEET |
|---|---|---|
| AG50–C.FRAME | 1"=1" | 4 |

## REQUIREMENTS

MATERIAL:

THICKNESS: 7/8" depth

FINISH:

MOUNTING: C FRAME

| | SIZES (Opening) | |
|---|---|---|
| QTY | A | B |
| | | |
| | | |
| | | |
| | | |
| | | |
| | | |
| | | |
| | | |
| | | |
| | | |
| | | |
| | | |
| | | |
| | | |
| | | |
| | | |
| | | |
| | | |
| | | |

| DATE | APROVED |
|---|---|
| – | |

JOB #

QUOTE #

# AG 50 D FRAME

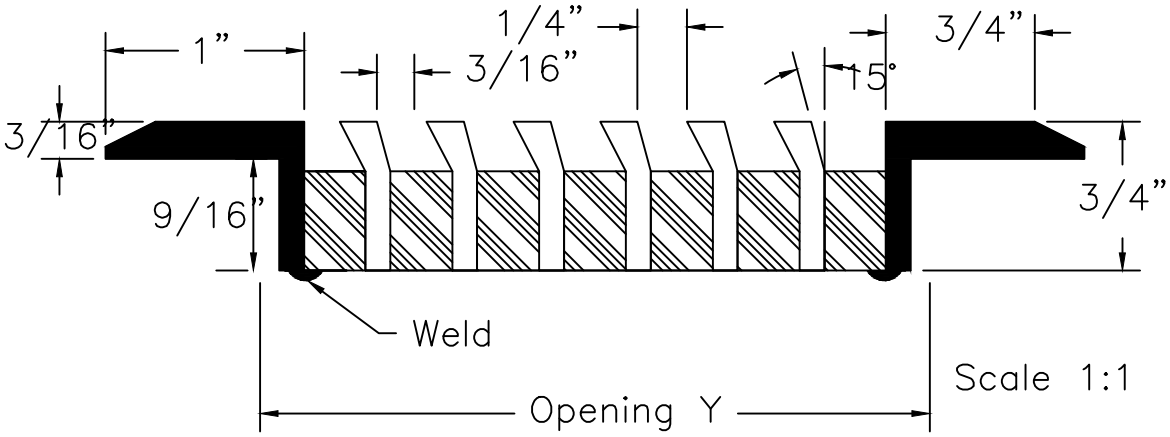


Scale 1:1

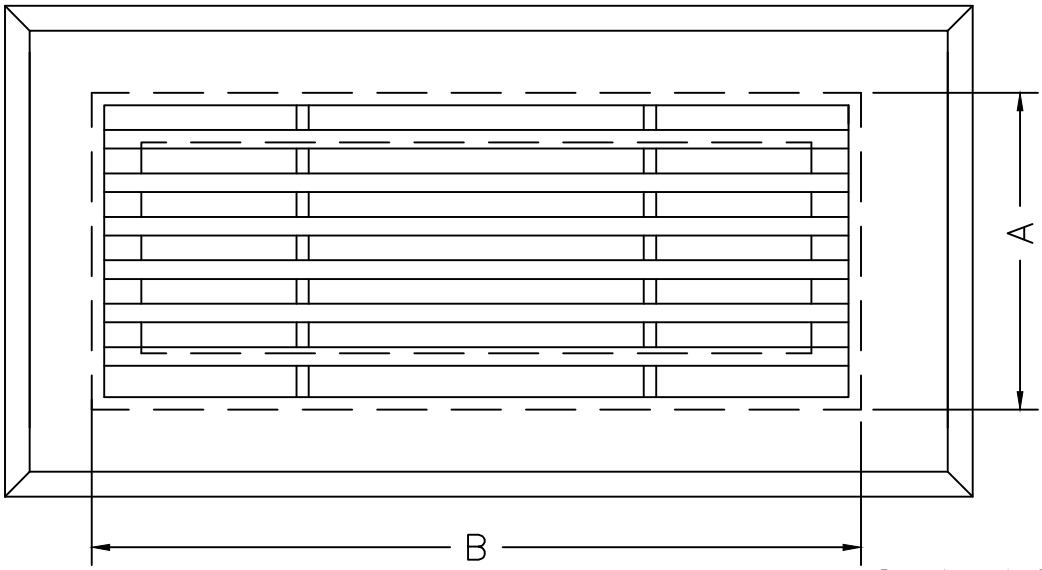


Scale 1:2

NOTE:

**ARCHITECTURAL GRILLE**

42 SECOND AVENUE
BROOKLYN, NY 11215
WWW.ARCHGRILLE.COM

| CUSTOMER | SIZE | REV |
|---|---|---|
| | A | – |

| DESCRIPTION | SCALE | SHEET |
|---|---|---|
| AG50–D.FRAME | 1"=1" | 5 |

## REQUIREMENTS

MATERIAL: ALUMINUM ONLY
THICKNESS: 3/4" depth
FINISH:
MOUNTING: D FRAME

| | SIZES (Opening) | |
|---|---|---|
| QTY | A | B |
| | | |
| | | |
| | | |
| | | |
| | | |
| | | |
| | | |
| | | |
| | | |
| | | |
| | | |
| | | |
| | | |
| | | |
| | | |
| | | |
| | | |
| | | |
| | | |

| DATE | APROVED |
|---|---|
| – | |

JOB #

QUOTE #

# AG 50 E FRAME

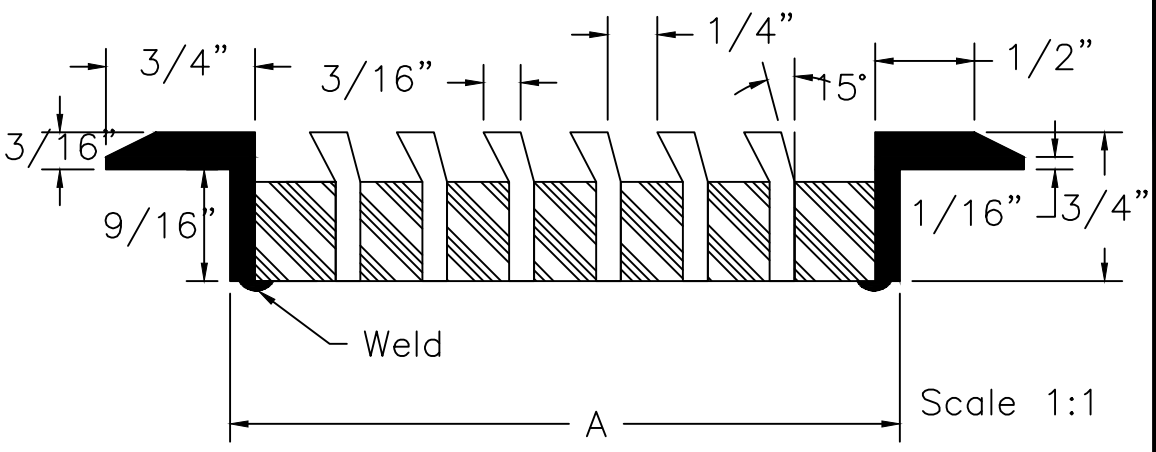


Scale 1:1

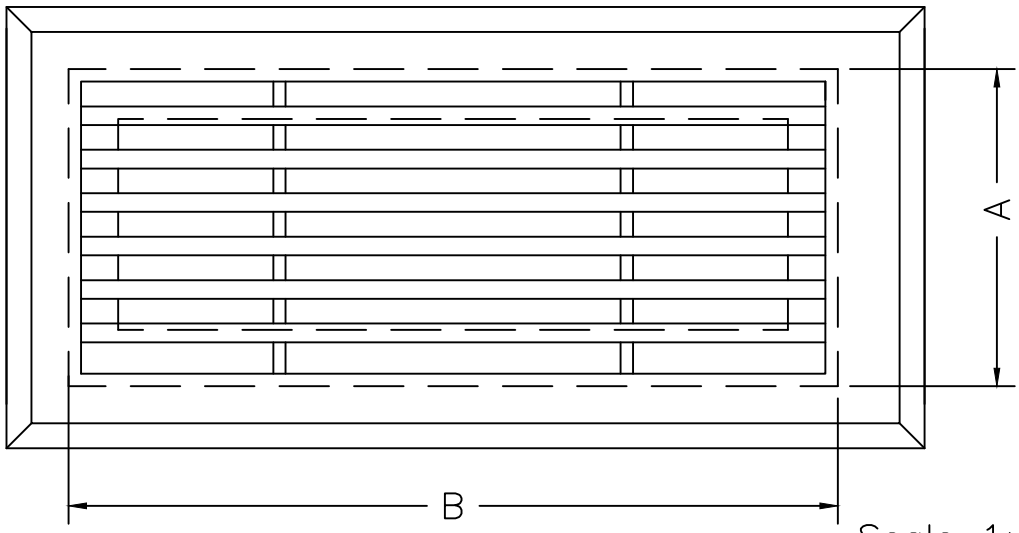


Scale 1:2

NOTE:

## REQUIREMENTS

MATERIAL: ALUMINUM ONLY

THICKNESS: 3/4" depth

FINISH:

MOUNTING: E FRAME

| | SIZES (Opening) | |
|---|---|---|
| QTY | A | B |
| | | |
| | | |
| | | |
| | | |
| | | |
| | | |
| | | |
| | | |
| | | |
| | | |
| | | |
| | | |
| | | |
| | | |
| | | |
| | | |
| | | |
| | | |
| | | |
| | | |

| DATE | APROVED |
|---|---|
| – | |

JOB #

QUOTE #


ARCHITECTURAL GRILLE

42 SECOND AVENUE
BROOKLYN, NY 11215
WWW.ARCHGRILLE.COM


| CUSTOMER | SIZE | REV |
|---|---|---|
| | A | – |

| DESCRIPTION | SCALE | SHEET |
|---|---|---|
| AG50–E.FRAME | 1"=1" | 6 |

# AG 50 F FRAME

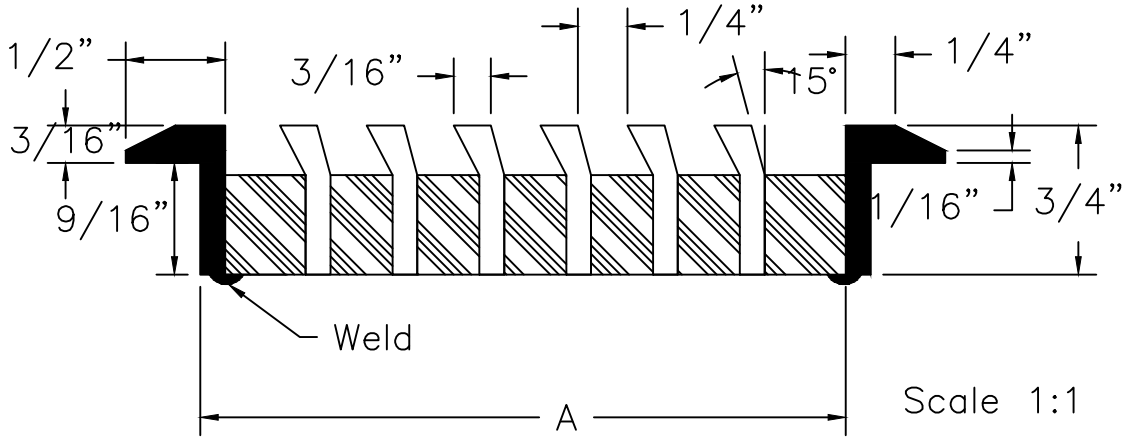


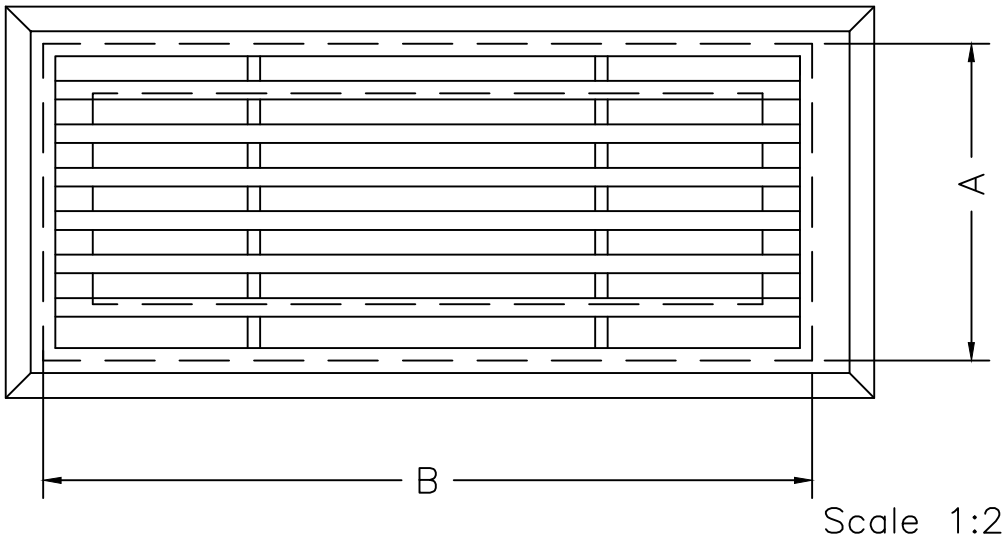


NOTE:

**ARCHITECTURAL GRILLE**

42 SECOND AVENUE
BROOKLYN, NY 11215
WWW.ARCHGRILLE.COM

| CUSTOMER | SIZE | REV |
|---|---|---|
| | A | – |

| DESCRIPTION | SCALE | SHEET |
|---|---|---|
| AG50–F.FRAME | 1"=1" | 7 |

REQUIREMENTS

MATERIAL: ALUMINUM ONLY

THICKNESS: 3/4" depth

FINISH:

MOUNTING: F FRAME

| | SIZES (Opening) | |
|---|---|---|
| QTY | A | B |
| | | |
| | | |
| | | |
| | | |
| | | |
| | | |
| | | |
| | | |
| | | |
| | | |
| | | |
| | | |
| | | |
| | | |
| | | |
| | | |
| | | |
| | | |
| | | |

| DATE | APROVED |
|---|---|
| – | |

JOB #

QUOTE #

# AG 50 G FRAME

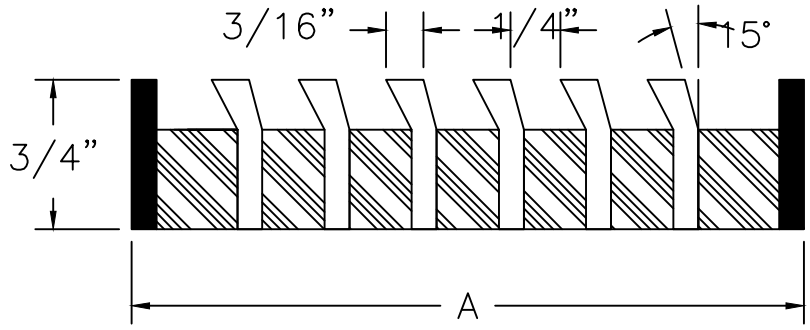


Scale 1:1

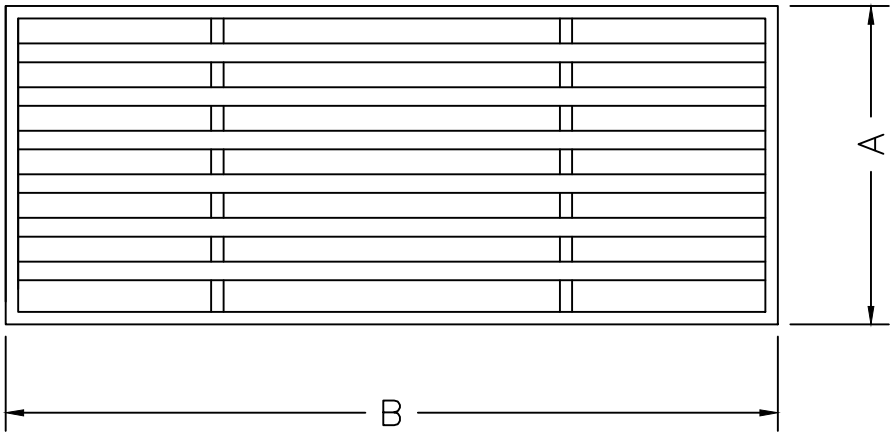


Scale 1:2

NOTE:

**ARCHITECTURAL GRILLE**

42 SECOND AVENUE
BROOKLYN, NY 11215
WWW.ARCHGRILLE.COM

| CUSTOMER | SIZE | REV |
|---|---|---|
| | A | – |

| DESCRIPTION | SCALE | SHEET |
|---|---|---|
| AG50–G.FRAME | 1"=1" | 8 |

## REQUIREMENTS

MATERIAL:

THICKNESS: 3/4" depth

FINISH:

MOUNTING: G FRAME

| | SIZES (Opening) | |
|---|---|---|
| QTY | A | B |
| | | |
| | | |
| | | |
| | | |
| | | |
| | | |
| | | |
| | | |
| | | |
| | | |
| | | |
| | | |
| | | |
| | | |
| | | |
| | | |
| | | |
| | | |
| | | |

| DATE | APROVED |
|---|---|
| – | |

JOB #

QUOTE #

# AG 50 J FRAME

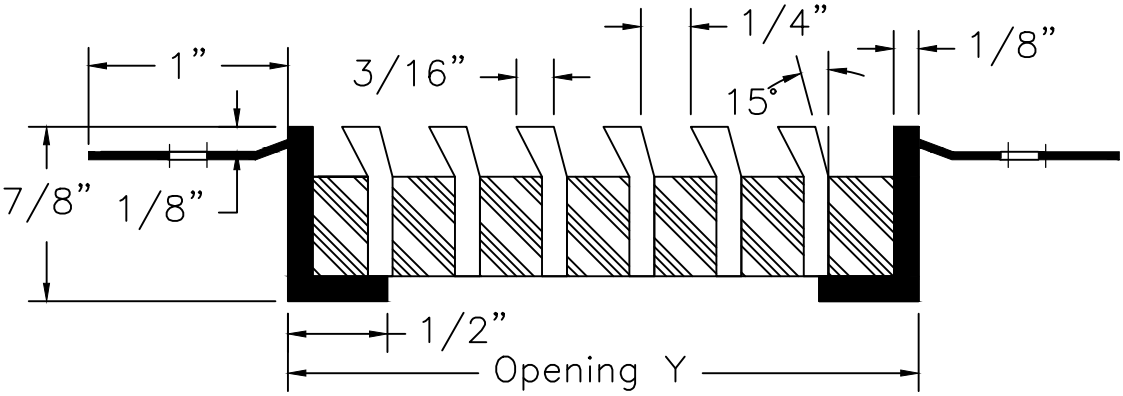


Scale 1:1

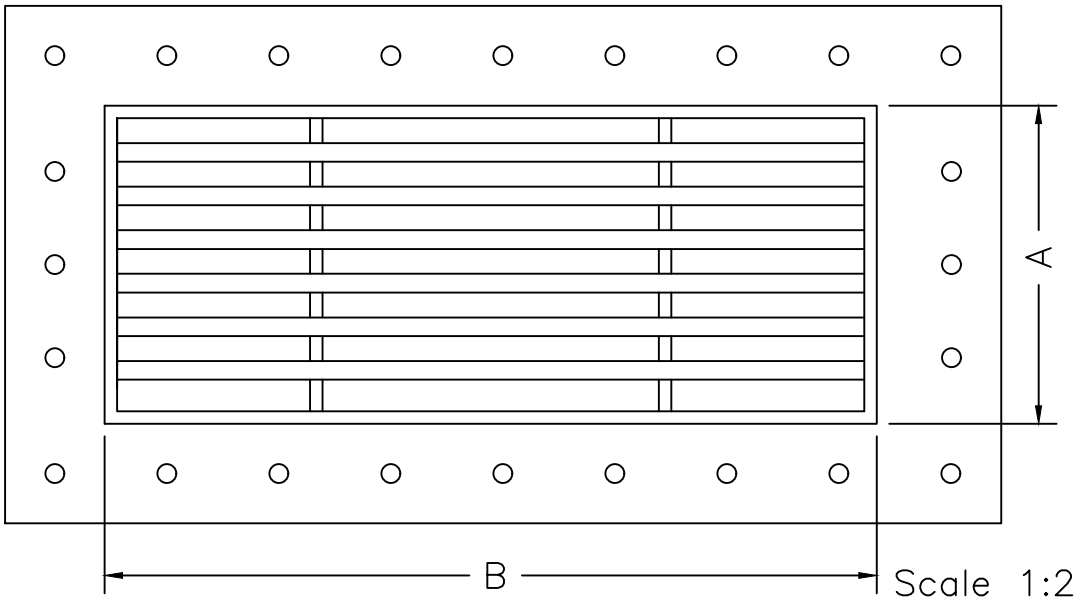


Scale 1:2

NOTE:

| REQUIREMENTS |
|---|
| MATERIAL: |
| THICKNESS: 7/8" depth |
| FINISH: |
| MOUNTING: J FRAME |

| | SIZES (Opening) | |
|---|---|---|
| QTY | A | B |
| | | |
| | | |
| | | |
| | | |
| | | |
| | | |
| | | |
| | | |
| | | |
| | | |
| | | |
| | | |
| | | |
| | | |
| | | |
| | | |
| | | |
| | | |
| | | |

| DATE | APROVED |
|---|---|
| – | |

JOB #

QUOTE #


ARCHITECTURAL GRILLE

42 SECOND AVENUE
BROOKLYN, NY 11215
WWW.ARCHGRILLE.COM


| CUSTOMER | SIZE | REV |
|---|---|---|
| | A | – |

| DESCRIPTION | SCALE | SHEET |
|---|---|---|
| AG50–J.FRAME | 1"=1" | 9 |