AG-10 CORE ONLY

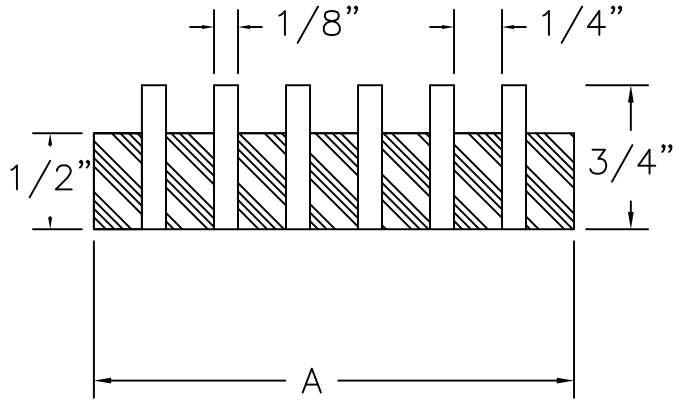

Scale 1:1

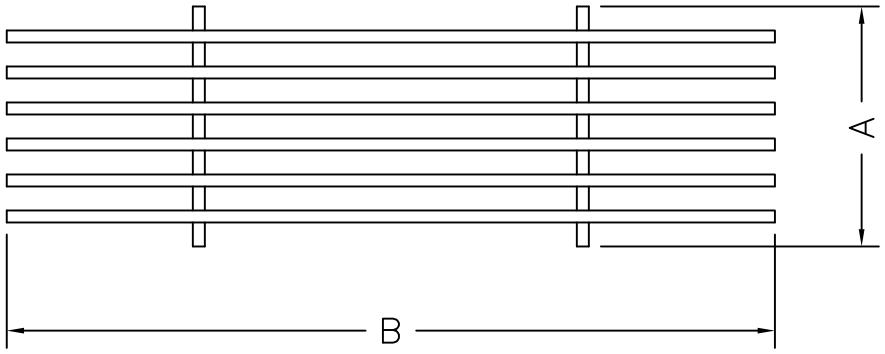

Scale 1:2

NOTE:

ARCHITECTURAL GRILLE

42 SECOND AVENUE
BROOKLYN, NY 11215
HTTP://WWW.ARCHGRILLE.COM/

CUSTOMER	SIZE	REV
	A	–

DESCRIPTION	SCALE	SHEET
AG10-CORE	1"=1"	1

REQUIREMENTS

MATERIAL:

THICKNESS: 3/4" depth

FINISH:

MOUNTING: CORE ONLY

	SIZES (Opening)	
QTY	A	B

DATE	APROVED
–	

JOB #

QUOTE #

AG 10 A FRAME

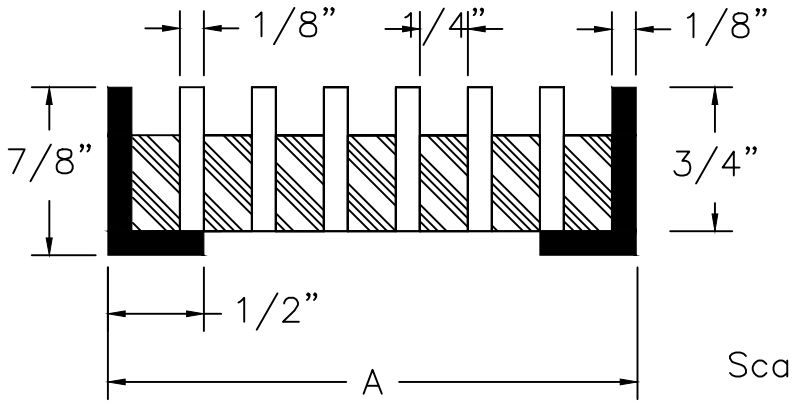

Scale 1:1

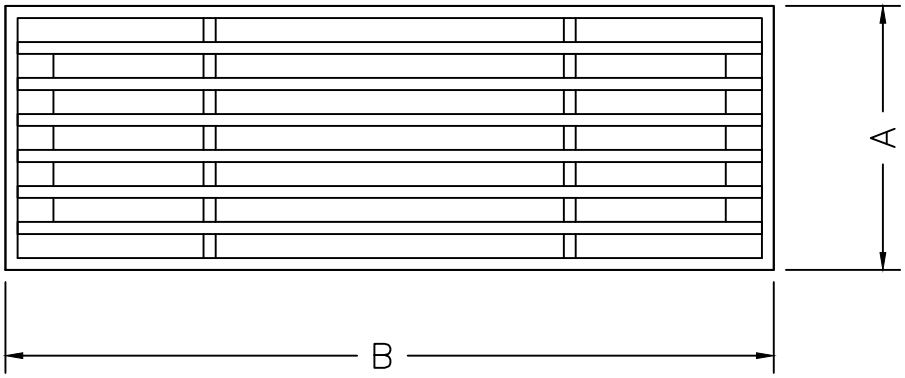

Scale 1:2

NOTE:

ARCHITECTURAL GRILLE

42 SECOND AVENUE
BROOKLYN, NY 11215
WWW.ARCHGRILLE.COM

CUSTOMER	SIZE	REV
	A	–

DESCRIPTION	SCALE	SHEET
AG10–A.FRAME	1"=1"	2

REQUIREMENTS

MATERIAL:

THICKNESS: 7/8" depth

FINISH:

MOUNTING: A FRAME

	SIZES (Opening)	
QTY	A	B

DATE	APROVED
–	

JOB #

QUOTE #

AG 10 B FRAME

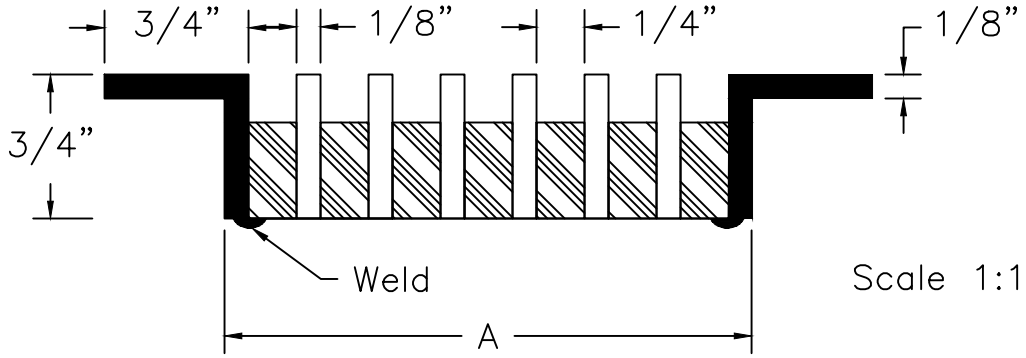

Scale 1:1

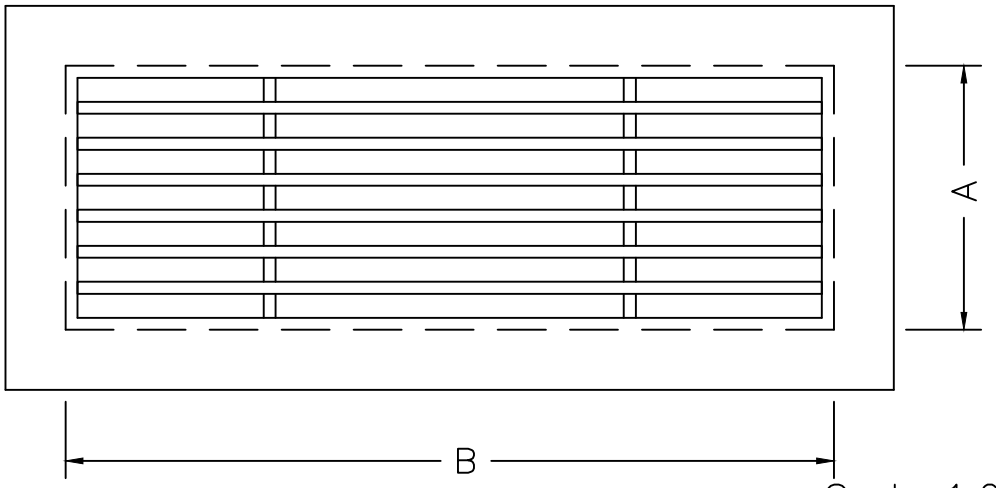

Scale 1:2

NOTE:

REQUIREMENTS
MATERIAL:
THICKNESS: 3/4" depth
FINISH:
MOUNTING: B FRAME

	SIZES (Opening)	
QTY	A	B

DATE	APROVED
–	

JOB #

QUOTE #

ARCHITECTURAL GRILLE

42 SECOND AVENUE
BROOKLYN, NY 11215
WWW.ARCHGRILLE.COM

CUSTOMER	SIZE	REV
	A	–

DESCRIPTION	SCALE	SHEET
AG10–B.FRAME	1"=1"	3

AG 10 C FRAME

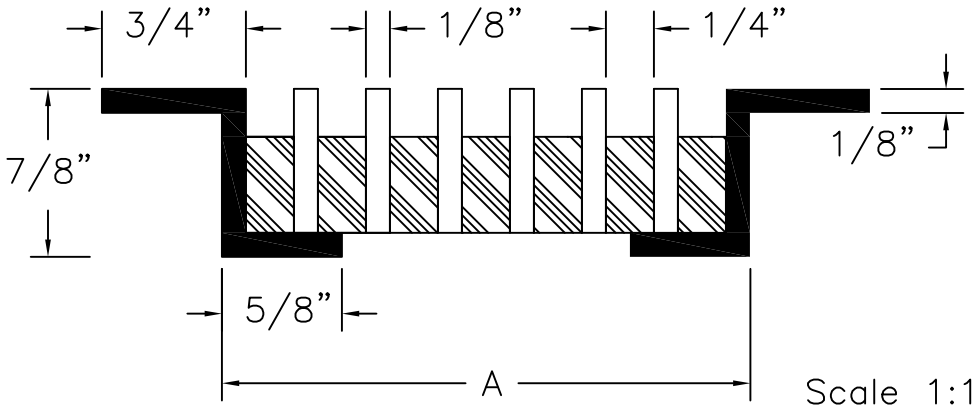

Scale 1:1

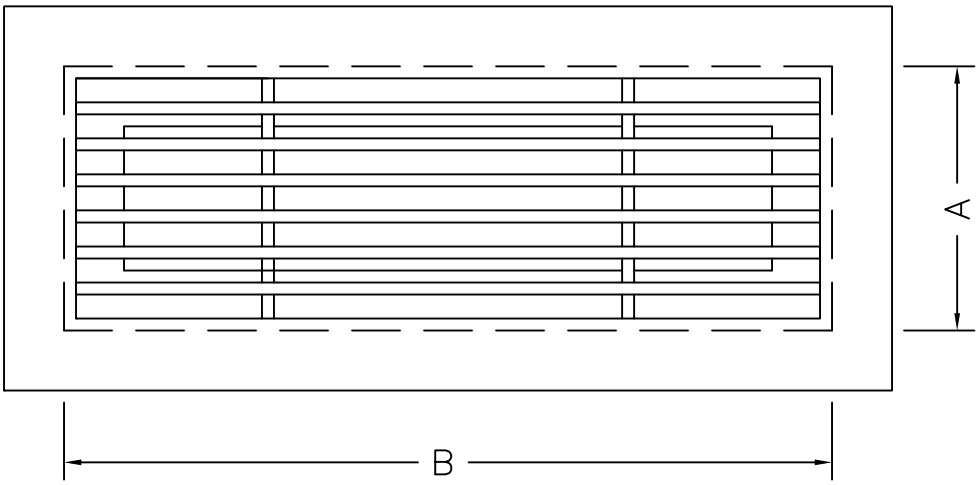

Scale 1:2

NOTE:

REQUIREMENTS
MATERIAL:
THICKNESS: 7/8" depth
FINISH:
MOUNTING: C FRAME

	SIZES (Opening)	
QTY	A	B

DATE	APROVED
–	

JOB #

QUOTE #

ARCHITECTURAL GRILLE

42 SECOND AVENUE
BROOKLYN, NY 11215
HTTP://WWW.ARCHGRILLE.COM/

CUSTOMER	SIZE	REV
	A	–

DESCRIPTION	SCALE	SHEET
AG10–C.FRAME	1"=1"	4

AG 10 D FRAME

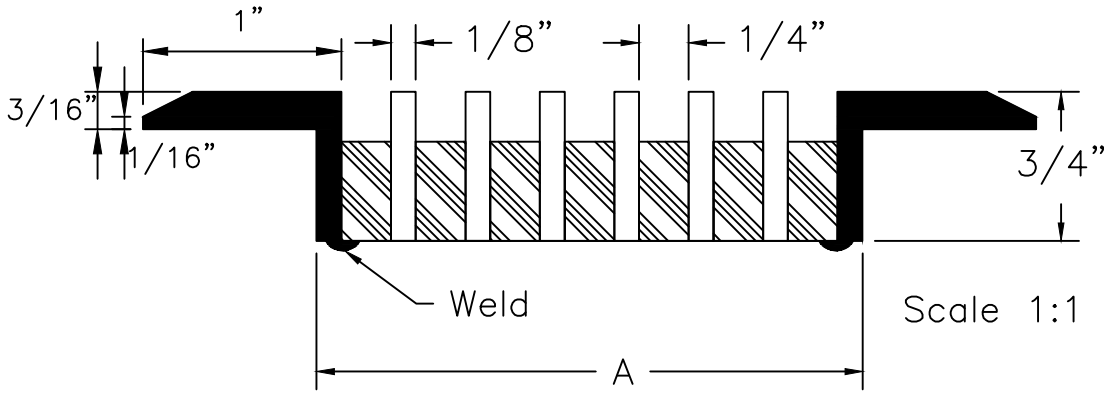

Scale 1:1

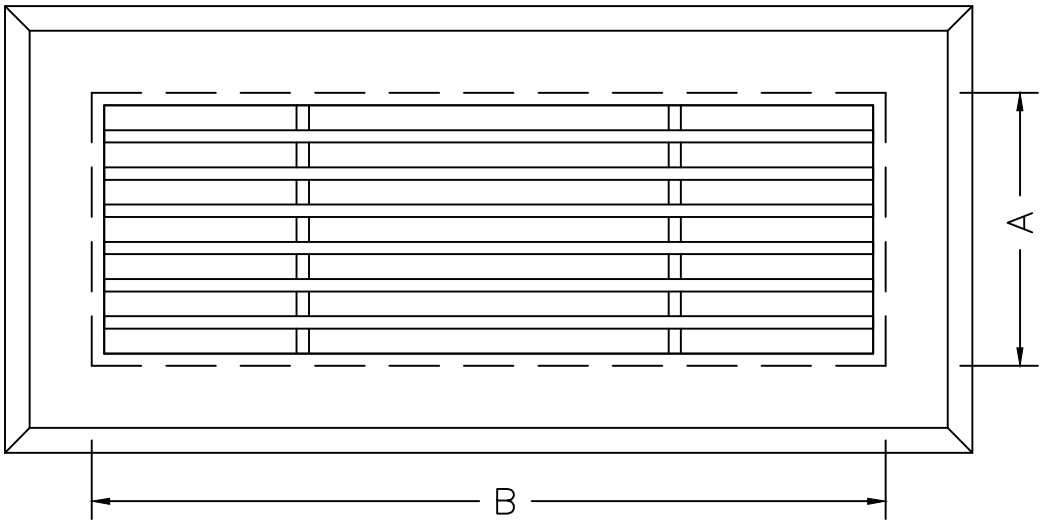

Scale 1:2

NOTE:

ARCHITECTURAL GRILLE

42 SECOND AVENUE
BROOKLYN, NY 11215
WWW.ARCHGRILLE.COM

CUSTOMER	SIZE	REV
	A	–

DESCRIPTION	SCALE	SHEET
AG10–D.FRAME	1"=1"	5

REQUIREMENTS

MATERIAL: ALUMINUM ONLY

THICKNESS: 3/4" depth

FINISH:

MOUNTING: D FRAME

	SIZES (Opening)	
QTY	A	B

DATE	APROVED
–	

JOB #

QUOTE #

AG 10 E FRAME

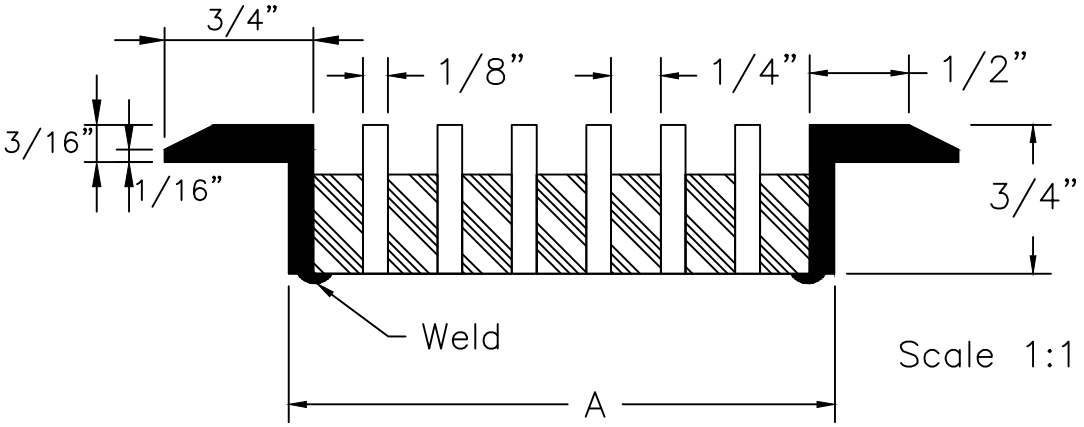

Scale 1:1

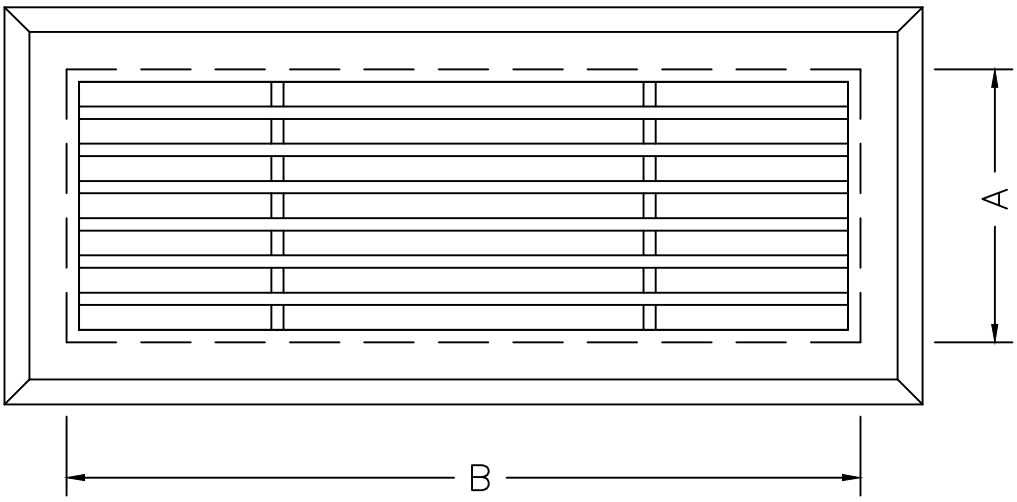

Scale 1:2

NOTE:

REQUIREMENTS

MATERIAL: ALUMINUM ONLY

THICKNESS: 3/4" depth

FINISH:

MOUNTING: E FRAME

	SIZES (Opening)	
QTY	A	B

DATE	APROVED
–	

JOB #

QUOTE #

ARCHITECTURAL GRILLE

42 SECOND AVENUE
BROOKLYN, NY 11215
WWW.ARCHGRILLE.COM

CUSTOMER	SIZE	REV
	A	–

DESCRIPTION	SCALE	SHEET
AG10–E.FRAME	1"=1"	6

AG 10 F FRAME

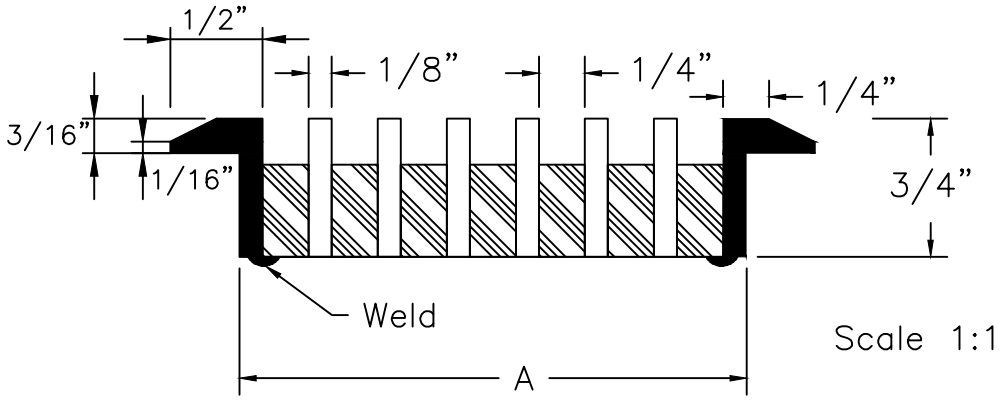

Scale 1:1

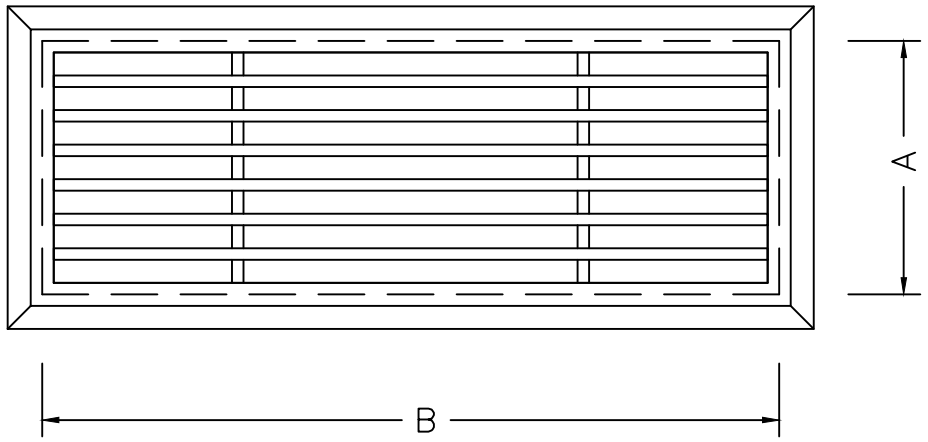

Scale 1:2

NOTE:

ARCHITECTURAL GRILLE

42 SECOND AVENUE
BROOKLYN, NY 11215
WWW.ARCHGRILLE.COM

CUSTOMER	SIZE	REV
	A	–

DESCRIPTION	SCALE	SHEET
AG10–F.FRAME	1"=1"	7

REQUIREMENTS

MATERIAL: ALUMINUM ONLY
THICKNESS: 3/4" depth
FINISH:
MOUNTING: F FRAME

	SIZES (Opening)	
QTY	A	B

DATE	APROVED
–	

JOB #

QUOTE #

AG 10 G FRAME

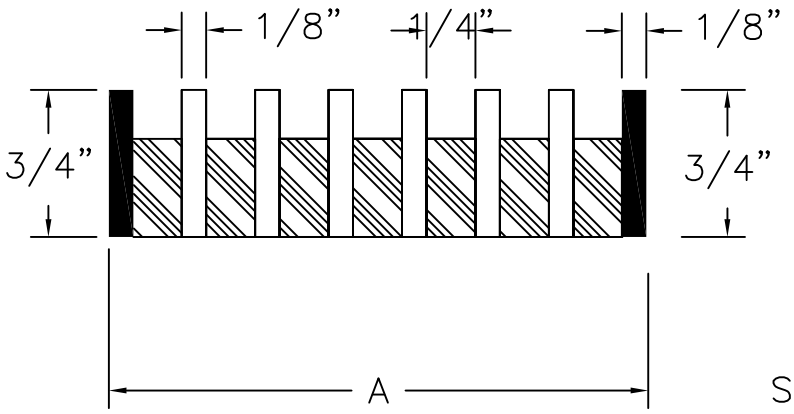

Scale 1:1

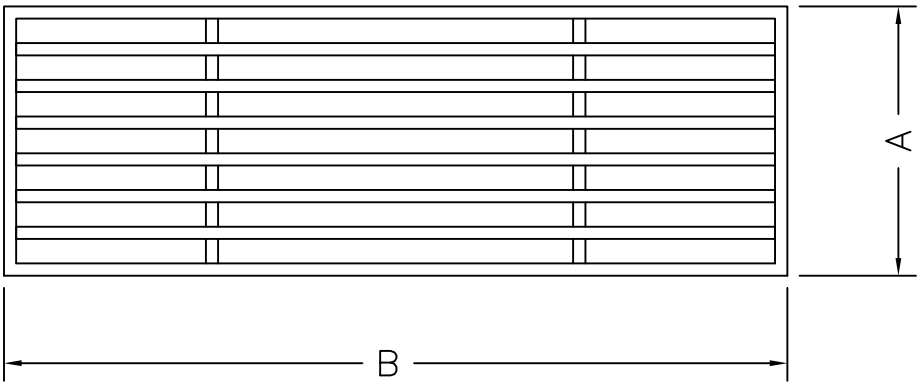

Scale 1:2

NOTE:

REQUIREMENTS

MATERIAL:

THICKNESS: 3/4" depth

FINISH:

MOUNTING: G FRAME

	SIZES (Opening)	
QTY	A	B

DATE	APROVED
–	

JOB #

QUOTE #

ARCHITECTURAL GRILLE

42 SECOND AVENUE
BROOKLYN, NY 11215
HTTP://WWW.ARCHGRILLE.COM/

CUSTOMER	SIZE	REV
	A	–

DESCRIPTION	SCALE	SHEET
AG10–G.FRAME	1"=1"	8

AG 10 J FRAME

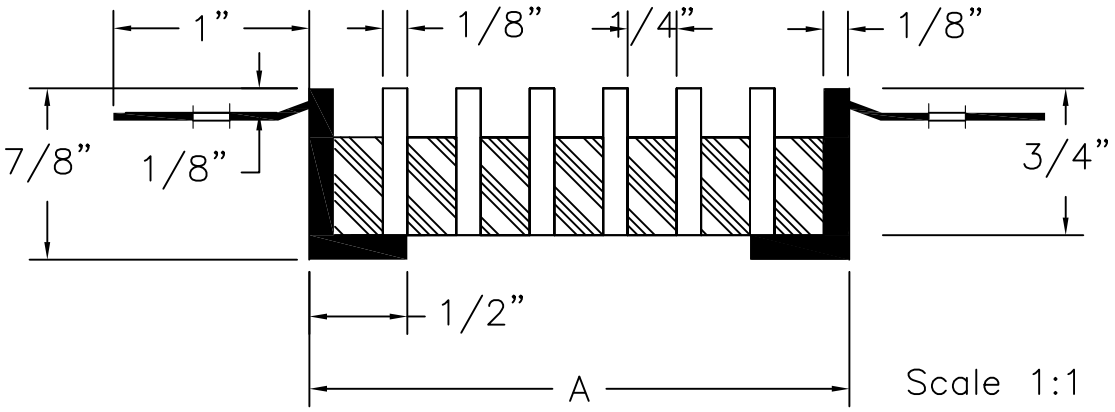

Scale 1:1

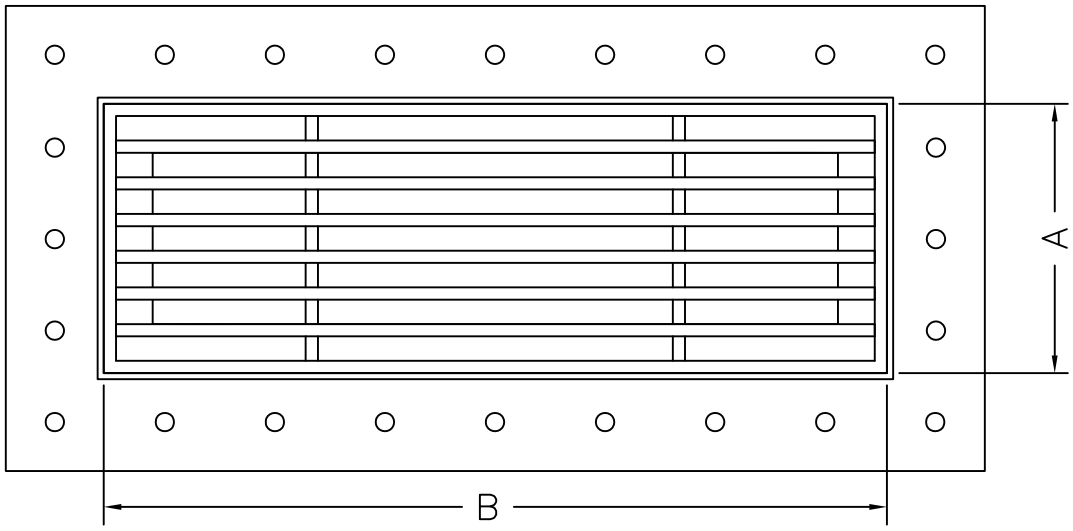

Scale 1:2

NOTE:

REQUIREMENTS

MATERIAL:

THICKNESS: 7/8" depth

FINISH:

MOUNTING: J FRAME

	SIZES (Opening)	
QTY	A	B

DATE	APROVED
–	

JOB #

QUOTE #

ARCHITECTURAL GRILLE

42 SECOND AVENUE
BROOKLYN, NY 11215
HTTP://WWW.ARCHGRILLE.COM/

CUSTOMER	SIZE	REV
	A	–

DESCRIPTION	SCALE	SHEET
AG10–J.FRAME	1"=1"	9