TEAR DROP # 221

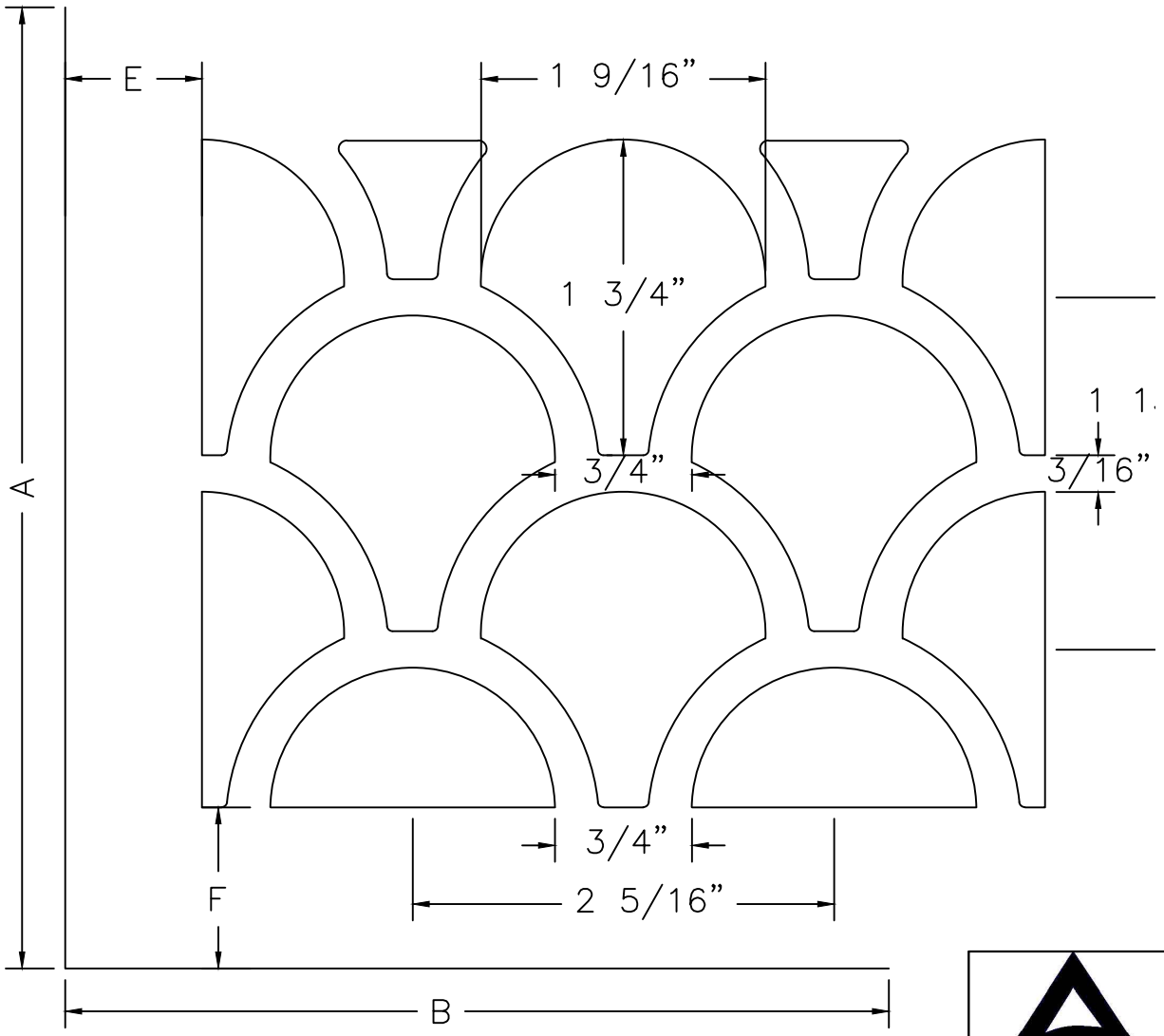

REQUIREMENTS

MATERIAL:

THICKNESS:

FINISH:

MOUNTING:

	SIZES (Overall)		BORDERS	
QTY	A	B	E	F

DATE	APPROVED
—	....

JOB #

QUOTE #

ARCHITECTURAL GRILLE

42 SECOND AVENUE
BROOKLYN, NY 11215
WWW.ARCHGRILLE.COM

CUSTOMER	DRAWN BY	SIZE	REV
—			

DESCRIPTION	SCALE	SHEET
TEAR DROP # 221 1 3/4”	1:1	D1