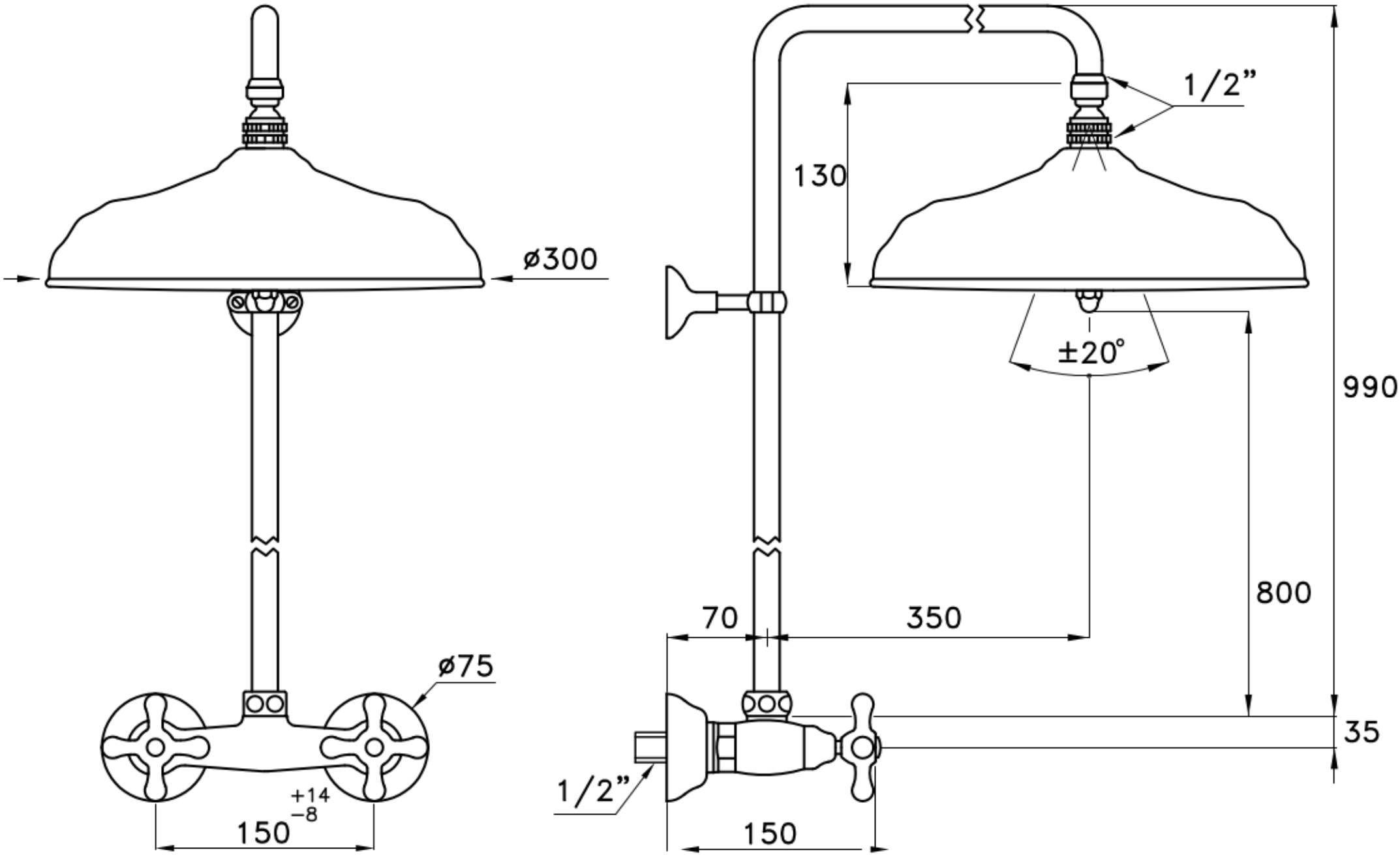

3283/301/314A ø300 ROMA