CANOPY TOP

10'x15'

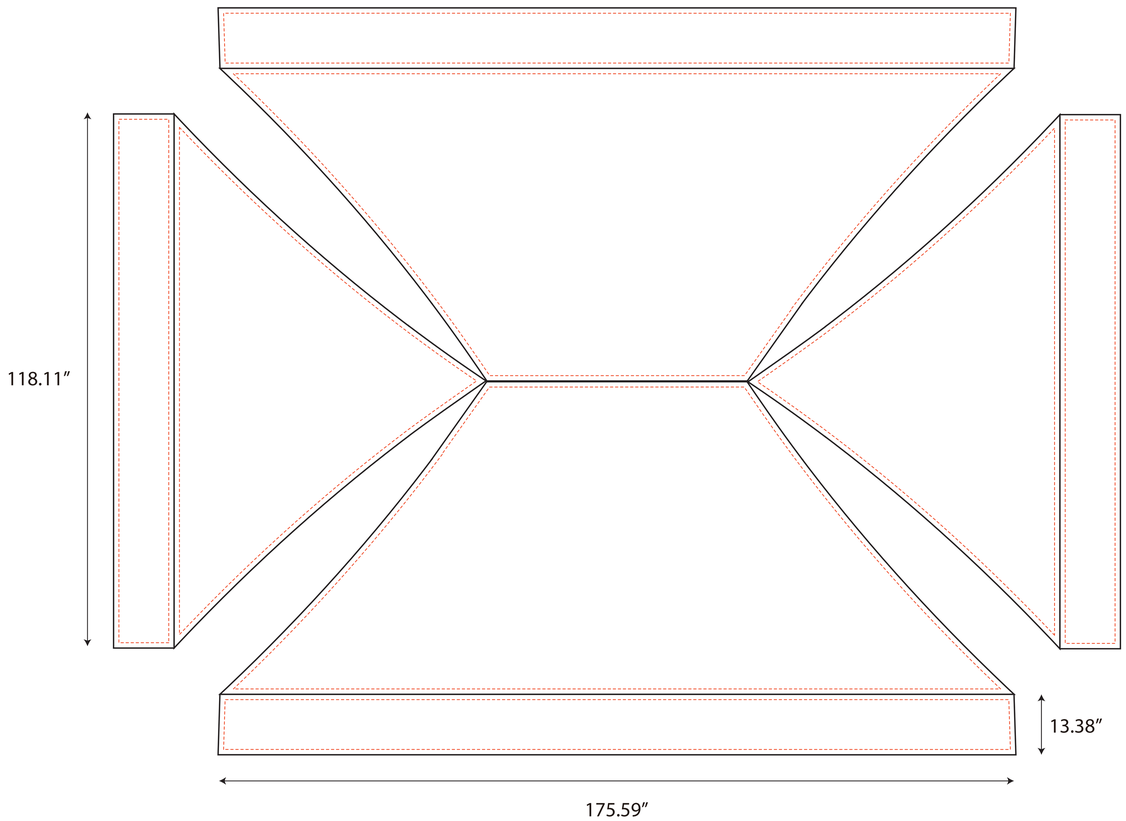

HALF SIDE WALL (RIGHT)

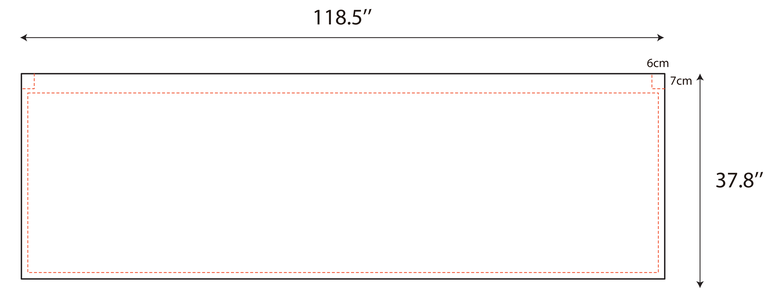

HALF SIDE WALL (LEFT)

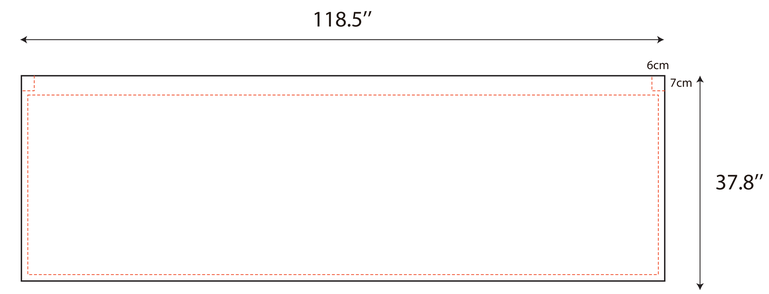

FULL FRONT WINDOW WALL

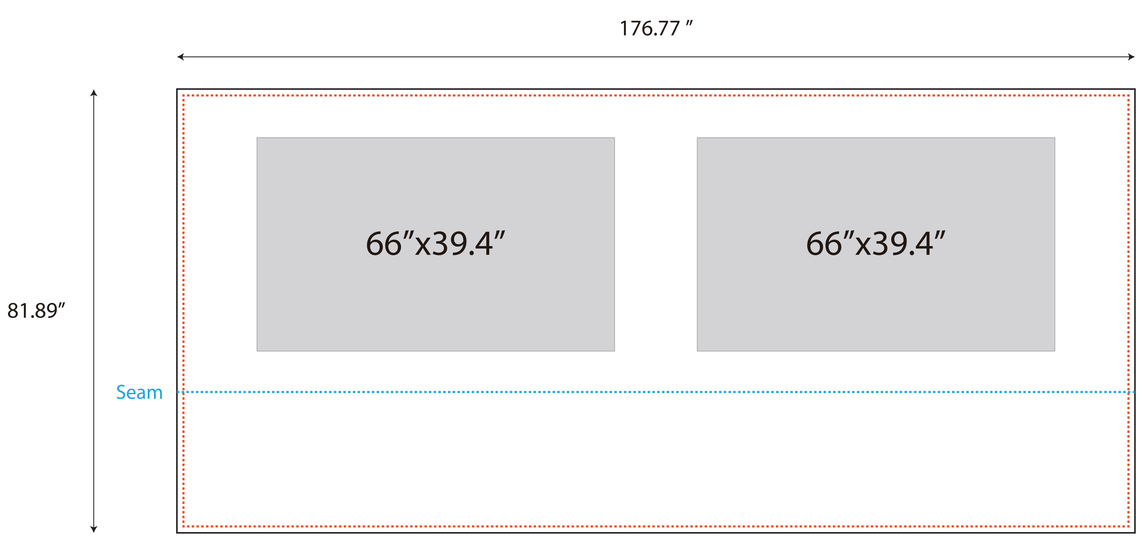
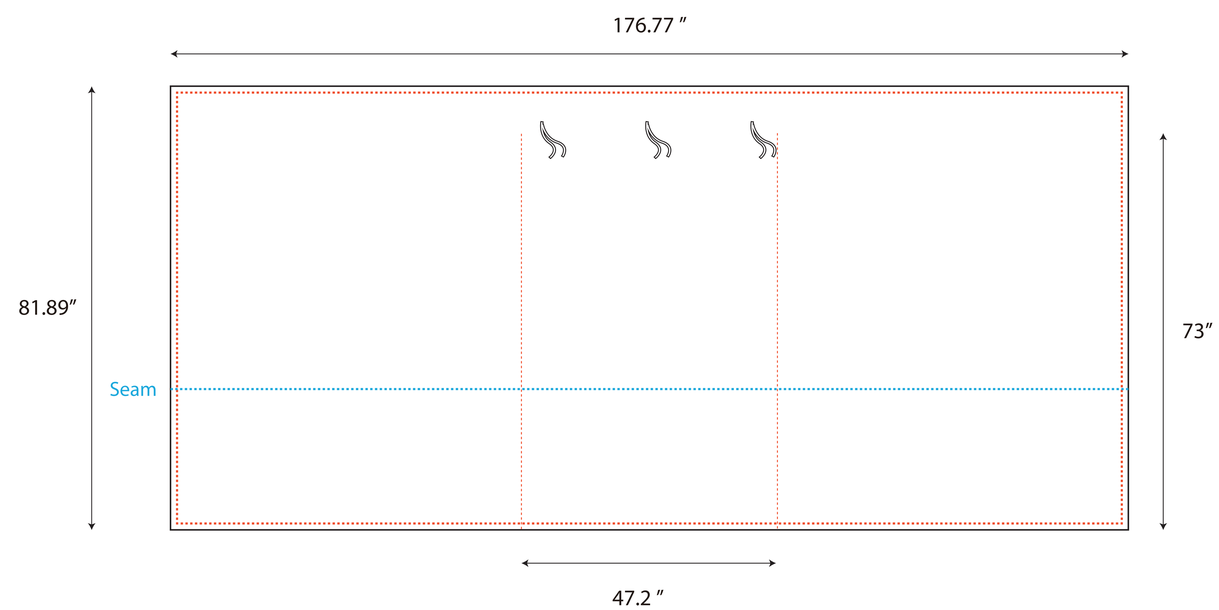
FULL BACK WALL DOOR