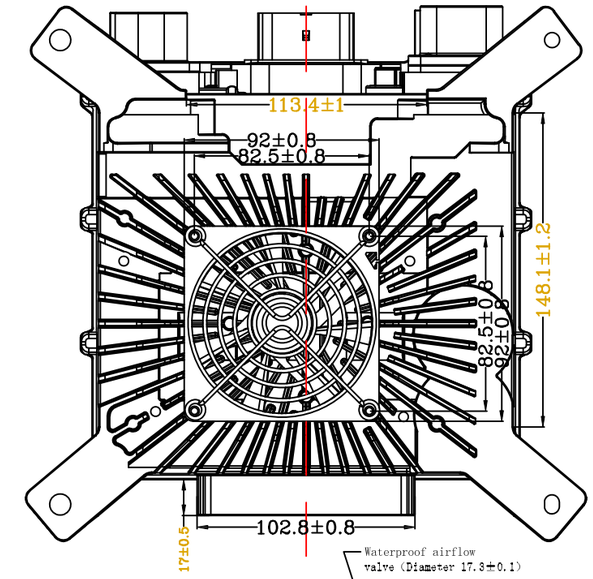

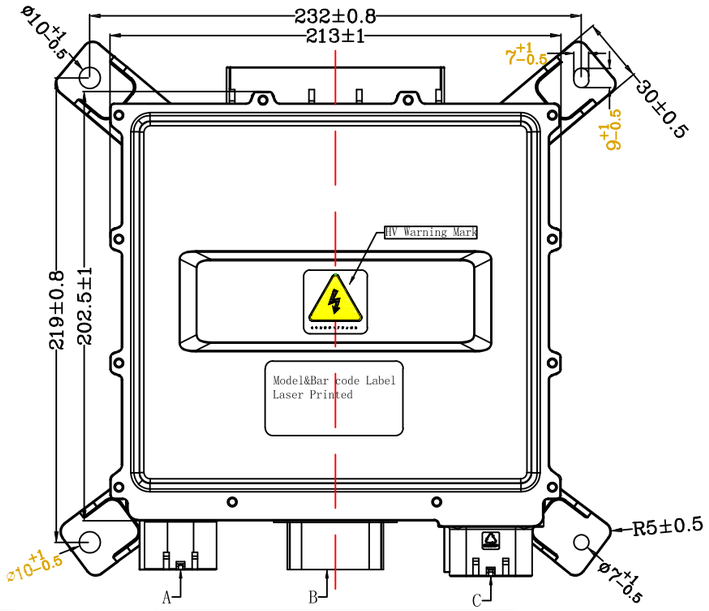

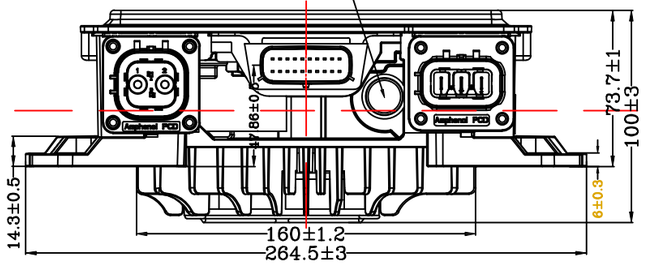

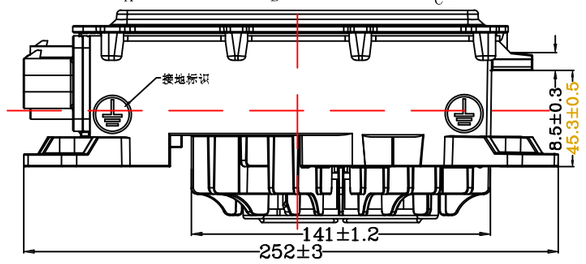

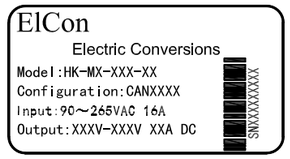

Model & Bar code Label
Laser Printed or Sticker

V1.0	2022.08.31

HV Warning Mark
2:1

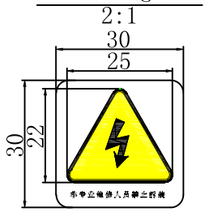

The description of the mark: white background. The symbol and the the frame is black. The rest is yellow;The character is black, song type. The height is 1.5mm.

A View
1:1

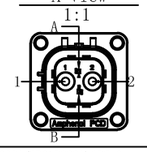

B向
1:1

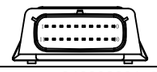

HVSL362022A(SP01B022A)OBC Output Terminal
Crimping(Big):C3100235011(SP01N45001P)
Crimping(Small):C310003614(SP01N12001S)

Brand	Pin	Definition	Wiring Color /Diameter(mm²)
Amphenol	1	Positive	Red/8AWG
	2	Negative	Black/8AWG
	A	HVIL Signal 1	Grey/0.5mm²
	B	HVIL Signal 2	Brown/0.5mm²

C向
1:1

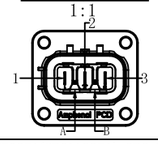

HVSL633023A(SP01A023A) OBC Input Terminal
Crimping (Big): C310003622(SP01N63001P)
Crimping(Small): C310003614(SP01N12001S)

Brand	Pin	Definition	Wiring Color /Diameter(mm²)
Amphenol	1	Null Line (N)	Black/4
	2	Earth Line (PE)	Yellow Green/4
	3	Live Line (L)	RED/4
	A	HVIL Signal 1	Grey/0.5
	B	HVIL Signal 2	Brown/0.5

348302001 Signal Terminal

Brand	Pin	Definition	Color/Wiring Diameter (mm²)
Molex	10	12V5A Output +	/
	11	CANH	
	12	CANL	
	13	HVIL 1	
	14	HVIL 2	
	17	GND	
	Others	NC	

Mating Connectors (For Reference)

Terminal	Mating Connector	Crimping	Accessories
OBC Input	HVSL633063A106I (SP01A063A106I)	C310003623 (SP01N63001S)	Included
OBC Output	HVSL362062A110I (SP01B062A110I)	C3100235021 (SP01N45001S)	Included
OBC Signal	334722006	330122002	Rest (Included) 343450001 (Selas)

Model: HK-MF- 108 -32

Technical requirements:

1. Vehicle Models: According to customers;
2. Parts number:According to customers;
3. Working temperature: -40 ℃ to +85 ℃
4. Storage temperature: -55 ℃ to +100 ℃
5.Rated output voltage: 96 VDC; Output Voltage Range:45～177VDC;
6.Max output current: 32A;
7.Enclosure Grade: IP 67
8.Rated Power: 3.3 KW;
9.The Input Voltage Range: 90 VAC - 265 VAC
10.Insulation resistance: Under 1000VDC, the isolation resistance value meeting the requirements of input , output terminal to case >= 20M ohm;
11.Ground Resistance: Under 25A DC, the resistance value meeting the requirements of AC PE pin to ground pin ≤100mΩ.
12.Power Factor ≥0.98;
13.Full Load Efficiency: ≥93%;
14.The protection function of OBC: Reverse Protection; Short Circuit Protection; Under Voltage Protection; Over Voltage Protection; Over Heating Protection;
15.All adapting connectors are tightly and neatly pressed, and well connected;
16.The crimping should be neat and tight, well contacted.
17.For parts, there is no tolerance marked, should be complied with GB/T 1804-2000 class v.
18.Other requirements comply with QC/T 895-2011
19.CAN Algorithm Number: TBD

TCKH-1485Z	V1.0					A0
3.3KW/HK-M						1:1

ElCon
Electric Conversions