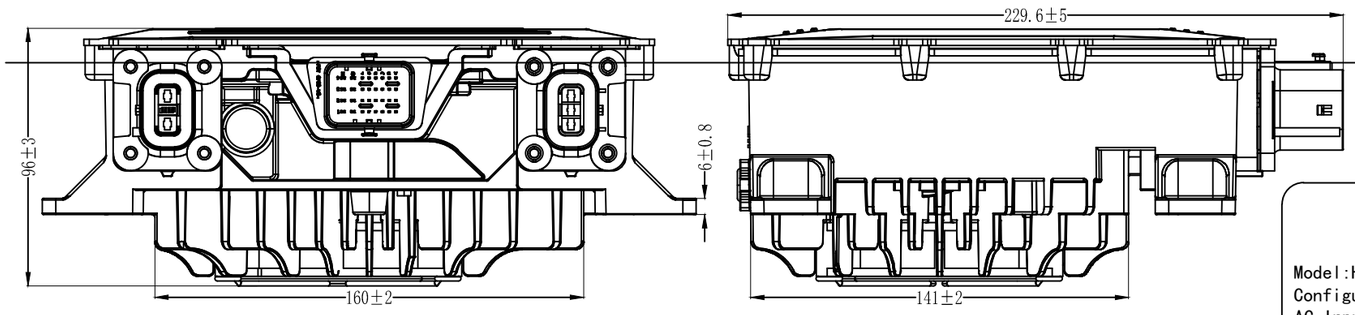

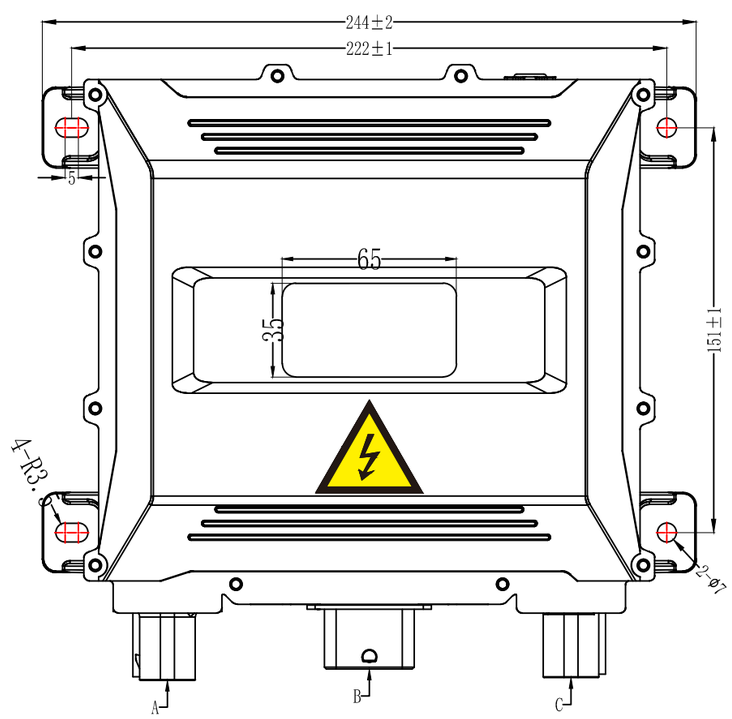

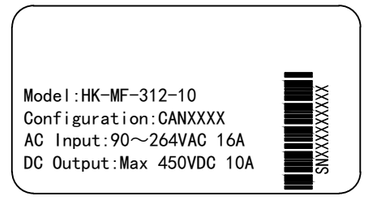

A向

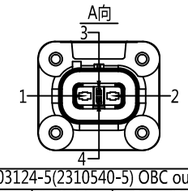

2103124-5(2310540-5) OBC output			
Brand	Pin	Definition	Color/Dia. (mm²)
TE	1	Positive+	Red/2.5
	2	Negative-	Black/2.5
	3、4	HVIL	Black/0.5

B向

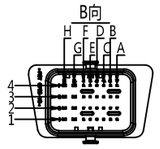

0643340100 OBC Signal Connector			
Brand	Pin	Definition	Mark
Molex	2H	12V5A	LV output
	4A	CAH_H	
	4B	CAN_L	
	4G	GND	
	rest	NC	

C向

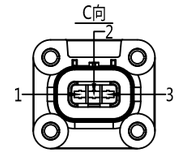

2103247-1 OBC Input			
Brand	Pin	Definition	Color/Dia. (mm²)
TE	1	Line (L)	Brown/2.5
	2	Earth (PE)	Yellow Green/2.5
	3	Null (N)	Blue/2.5

2021.05.24		

Recommended Connectors List(Reference. included in charger)				
	4-2103015-1	300102500679	1	
	2103154-2	300102500690	1	
	1-2103157-2	300102500681	2	
	2103155-2	300102500684	1	
	2103153-1	300102500682	1	
	2103306-1	300102500686	1	
	2103013-2	300102500685	1	
	4-2103177-5 (2310537-5)	300102500671	1	
	1-968853-3	300102500676	5	
	1587826-3	300102500677	1	
	2103181-3	300102500678	1	
	0643193211	300102501166	1	
	0643231029	300102501281	2	
	0643221039	300102501231	2	
	0643251023	300102501282	6	
	0643251010	300102501283	22	
	0643191201	300102501284	1	

TC Model: HK-MF-312-10

Technical requirements:

1. Vehicle Models: According to customers' ~
2. Parts number:According to customers' ~
3. Working temperature: -40 ℃ to +85 ℃
4. Storage temperature: -55 ℃ to +100 ℃
5.Rated output voltage: 312 VDC; Output Voltage Range: 200-450VDC' ~
6.Max output current: 10A;
7.Enclosure Grade: IP 67
8.Rated Power: 3.3 KW;
9.The Input Voltage Range: 90 VAC - 265 VAC
10.Insulation resistance: Under 1000VDC, the isolation resistance value meeting the requirements of input , output terminal to case >= 20M ohm;
11.Ground Resistance: Under 25A DC, the resistance value meeting the requirements of AC PE pin to ground pin ≤100mΩ.
12.Power Factor ≥ 0.98;
13.Full Load Efficiency: ≥ 93%;
14.The protection function of OBC: Reverse Protection; Short Circuit Protection; Under Voltage Protection; Over Voltage Protection; Over Heating Protection;
15.All adapting connectors are tightly and neatly pressed, and well connected;
16.The crimping should be neat and tight, well contacted.
17.For parts, there is no tolerance marked, should be complied with GB/T 1804-2000 class v.
18.Other requirements comply with QC/T 895-2011
19.CAN Algorithm Number: TBD

ⓒ								
ⓑ								
ⓐ								
								HK-MF 3.3KW
				TCKH-1485AR			1:2	/

D