Solution
Graphic Keypads

This guide covers the following keypads;

- CP700B - White
- CP710B - Black
- CP722B - Smart Card - White
- CP732B - Smart Card - Black
- CP741B - Wi-Fi Enabled - Tamper - White
- CP799B - Service Keypad

Security Systems

EN | Installer Reference Guide
Security System

BOSCH

CONTENTS

Solution - Graphic Keypads

The Solution Graphic Keypad's décor-friendly white plastic housing and stylish curved face blends with the most discerning of interior designs and can be used with or without the hinged door according to individual customer taste or requirements.

All system programmable features and options are displayed in full text on the keypad allowing the system to be programmed and configured without referring to the manual. Different models are available including versions with built-in Smart Card readers and Wi-Fi connectivity.

Keypads include red, green and blue indicators which are used to show area / door status and the 20 buttons with blue backlighting make it easy to operate in all lighting conditions. Refer to the panel Installer Reference Guide for more information on keypad options and panel programming.

Figure 1: Wi-Fi Enabled Graphic Keypad

Solution 6000 Keypad Compatibility		
Keypad Model	**Panel Version**	**Keypads Supported**
CP700B	All versions	Up to 16
CP710B	All versions	Up to 16
CP722B	All versions	Up to 16
CP732B	All versions	Up to 16
CP741B with Wi-Fi	2.25 or higher	1 Only (address 1)

Table 1: Keypad Compatibility

Keypad Addressing

Each keypad fitted to the system must be assigned a unique address on the LAN. For convenience the address dip switch configuration table shown below is also provided on the rear of the plastic keypad housing.

Wi-Fi enabled keypads are factory set to address 1 and cannot be changed. Other keypads should be set to an address other than 1 when a Wi-Fi keypad is being used.
Only 1 x Wi-Fi enabled keypad is supported per system.

Dip Switch 5 has been provided on selected keypads to allow easy termination of the RS485 LAN at the keypad if required.

DIP Switch Address Select

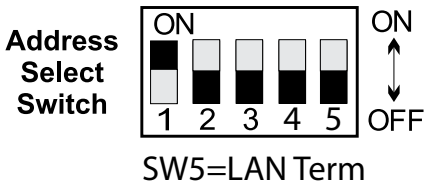

Figure 2: Address Switch Settings

Only 1 x Keypad can be assigned to each address. All Keypads are supplied from the factory set to address 1. You must power cycle the panel or perform a LAN scan whenever you change the keypad address

DIP Switch Address Settings					
Keypad/ Reader N°	**S1**	**S2**	**S3**	**S4**	**S5**
1	Off	Off	Off	Off	LAN Terminator Switch
2	On	Off	Off	Off	
3	Off	On	Off	Off	
4	On	On	Off	Off	
5	Off	Off	On	Off	
6	On	Off	On	Off	
7	Off	On	On	Off	
8	On	On	On	Off	
9	Off	Off	Off	On	
10	On	Off	Off	On	
11	Off	On	Off	On	
12	On	On	Off	On	
13	Off	Off	On	On	
14	On	Off	On	On	
15	Off	On	On	On	
16	On	On	On	On	

Table 2: DIP Switch Address Settings

Installing The Keypad

The keypad should be installed onto a solid surface using suitable mounting fixtures. Make sure the screw heads do not protrude above the surface of the mounting plate. Wiring should be performed while the control panel is powered off.

Step 1)
Using the keypad mounting plate as a template, mark out the location of the required mounting holes and the cable entry hole before drilling out all points as necessary. Mount the plate to the wall surface using the bubble level as a guide.

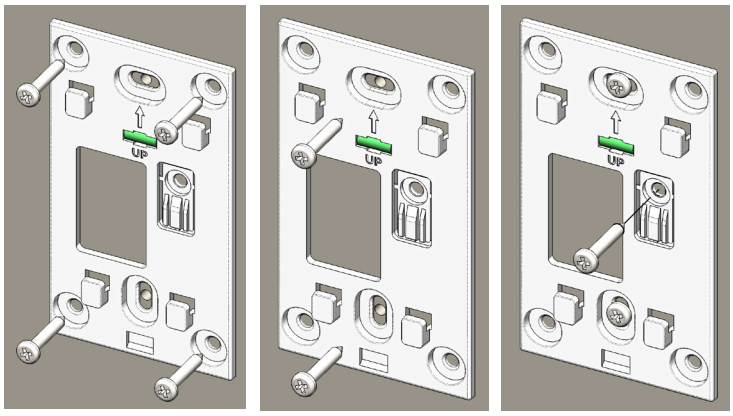

Figure 3: Base Plate Mounting Options

Step 2)
Pass the wiring cable through the hole in the wall and the mounting plate before terminating the wires on the keypad terminals. Follow the provided connection diagram and if applicable set the required keypad address at this time.

Step 3)
If the keypad has a built in tamper switch, you will also need to install the rear tamper screw in the rear tamper plate. Once installed use a knife to cut the 3 small plastic tabs holding the rear tamper plate so it is no longer connected to the keypad mounting plate.

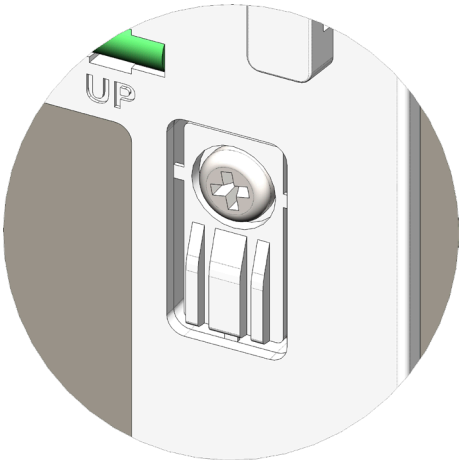

Figure 4: Rear Tamper Plate

Step 4)
To mount the keypad simply align the 4 rectangular holes in the back of the keypad with the 4 hooks on the mounting plate and then slide the keypad down until it locks firmly into place.

Step 5)
To remove the keypad from the mounting plate, place a small flat blade screwdriver at the bottom of the keypad as shown and gently push the screwdriver in toward the keypad until the lock releases and the keypad slides off the mounting plate.

Do not use the screwdriver to prize or lever the keypad off the base plate or damage will occur.

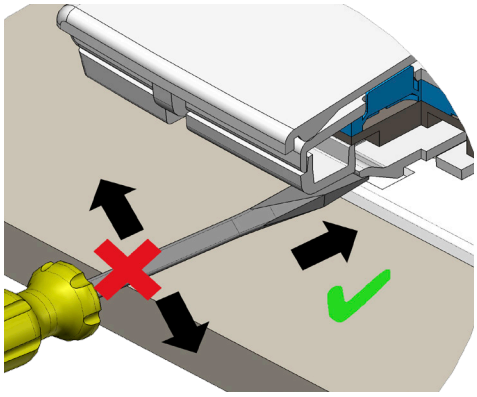

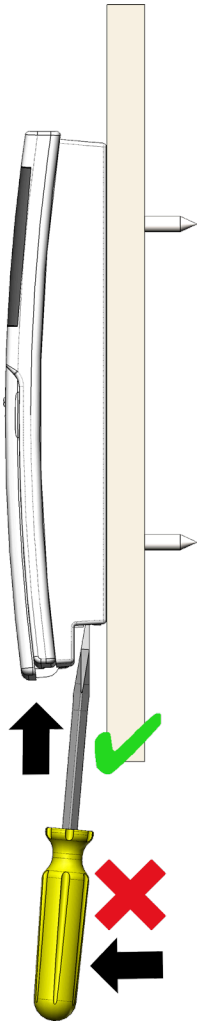

Figure 5: Removing Keypad From The Base Plate

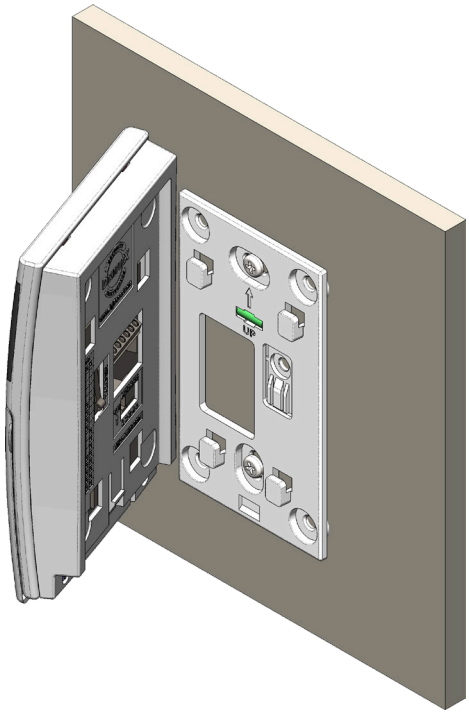

Figure 6: Mounting Keypad To Base Plate

Keypad Operation

Keypads can be configured to provide system area control, door access control or both depending on the installation requirements.

Feedback is provided by both the LCD display on the keypad and also via the green, blue and red indicators and the keypad sounder.

Smart Card enabled keypads also include an egress input and lock output which can be used to control door access if required.

LCD Status Icons

The following table lists the function of each of the ICON symbols shown on the keypad LCD display.

LCD Status Icons		
Icon	Status	Meaning
1 2 3 4 5 6 7 8	The keypad can be programmed to display area icons (1 to 8) that allow users to easily identify which areas have been turned on or off without the need to toggle between areas (See MENU 6-1-4).	
	On	The area is turned All On or Part On
	Off	The area is turned Off
	Flashing Fast	The area has an alarm
	On	System power is normal
	Flashing	System power is missing
	Flashing	A fire alarm is active
	Off	No fire alarm
	On	Fire alarm in memory (Turn the area All On and Off to Clear).
	On	The existing service or trouble condition has been acknowledged.
	Off	No service or trouble conditions exist.
	Flashing	A service or trouble condition is present that has not been acknowledged.
	On	The area is turned Part On.
	Off	The area is not turned Part On.
	On	The area is turned off.
	Off	The area is turned All On or Part On
	On	The area is turned All On or Part On
	Off	The area is turned Off
	On	All messages have been read.
	Off	Message queue is empty
	Flash	An unread message is in the queue.
	On	Area is ready to turn on (All On / Part On)
	Off	Not ready, Zone Open
Wi-Fi Connected		The Wi-Fi enabled keypad or module has successfully connected to your local Wi-Fi network.
Wi-Fi Not Connected		The Wi-Fi enabled keypad or module is not connected to your local Wi-Fi network.

Table 3: Icon Indicator Meanings

Keypad Key Functions

Graphic keypads include of 20 individual keys which are used to enter PIN's and control the system. Some keys have a secondary functions that are activated by holding the key down for two seconds.

Keypad Key Functions	
Button	Description
[0] to [9]	The numeric buttons allow you to enter PIN numbers and other functions when required.
[ON]	To arm the area (All On), enter the user PIN followed by the [ON] key.
[PART]	To arm the area (Part On), enter the user PIN followed by the [PART] key.
[OFF]	To disarm the area, enter the user PIN followed by the [OFF] key.
[OK]	The [OK] key allows you to save any changes and exit the command.
[MENU]	Use the [MENU] and the numeric keys to enter commands. The [MENU] key is also used to go back one level when navigating through menus or to exit a programming location without saving changes.
[MAIL]	The [MAIL] key allows you to read stored mail (TBA). This key can also be used to initiate a dialler test when you press and hold for two seconds.
[Arrow Keys]	The arrow keys allows you to move the cursor left or right and to navigate through menus or to toggle text characters when programming telephone numbers or names etc.

Table 4: Keypad Key Functions

Hold Down Functions

Keypads support the following hold down function when they have been assigned to an area. Emergency key functions can be disabled if required to prevent nuisance alarms.

See the Devices-Keypads & Readers-Emergency Keys menu option in panel programming to disable these features.

Hold Down Functions	
Function	**Meaning**
All ON	Enter a valid PIN and then press and hold down the [ON] key, the system will turn on or arm all areas that the user belongs to at the same time.
All OFF	Enter a valid PIN and then press and hold down the [OFF] key, the system will turn off or disarm all areas that the user belongs to at the same time.
[4]	Press and hold down the [4] key for 2 seconds to toggle chime mode on or off.
[6]	Press and hold down the [6] key for 2 seconds to force the system to answer an incoming PSTN RAS remote session call.
[→] + [↑]	Press and hold the [→] and [↑] keys down together for 2 seconds to trigger a Panic alarm. If programmed the sirens will sound and the monitoring station will be notified.
[←] + [→]	Press and hold the [←] and [→] keys down together for 2 seconds to trigger a Fire alarm. If programmed the sirens will sound and the monitoring station will be notified.
[↑] + [↓]	Press and hold the [↑] and [↓] keys down together for 2 seconds to trigger a Medical alarm. If programmed the sirens will sound and the monitoring station will be notified.

Table 5: Hold Down Functions

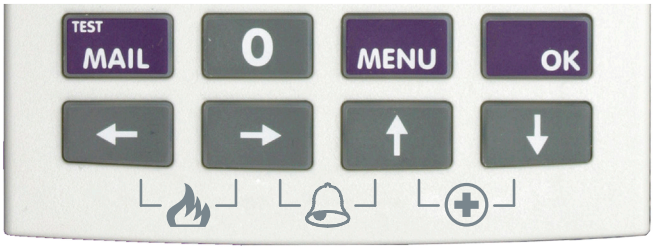

Figure 7: Keypad Emergency Alarm Triggers

Keypad LED Indicators

Keypads includes green, blue and red LED's which provide visual feedback during system operation.

The green and red LED's indicators will show area and alarm status and the blue LED will show the door status depending how the keypad has been configured.

LED Operation For Area Control		
Led	**Condition**	**Meaning**
Red	**On**	Area All On
	Flashing	Area Alarm
Green	**On**	Area is OFF
	Flashing	Area not ready to turn on - zone(s) unsealed
Red & Green	**Both On**	Area armed in Part mode and all zones sealed.
Red & Green	**Red On and Green Flashing**	Area armed in Part mode with zones unsealed.
Red & Green	**Alternate Flashing**	Keypad initialising during power up or LAN scan.
Red & Green	**Flashing**	Installer programming mode is active.
Red & Green	**Both Off**	Home Area and Access Group not programmed or keypad not powered.

Table 6: Keypad LED's - Area Control

To have the keypad control an area on the alarm system you need to assign the keypad to a home area. See the Devices-Keypads-Home Area menu option in panel programming. If alarm system control is not required then you should set the home area option to No Area.

LED Function For Door Control		
Led	**Condition**	**Meaning**
Blue	**On**	Door Locked
Blue	**Fast Flash**	Door Unlocked
Blue	**Continuous Fast Flash**	Door manually unlocked or overridden.
Blue	**2 Flashes**	Door automatically unlocked by schedule or time zone

Table 7: Keypad LED's - Door Control

To have the keypad control a door on the system you will need to assign the keypad to a door. See the Devices-Keypads & Readers-Door Assignment menu option in panel programming.

Once assigned with a door assignment, the on-board Lock output and Egress input will automatically be assigned to the same door as the keypad.

If both alarm area and door control is required then you will need to assign a home area and a door to the keypad. In this case the LED indicators will display for the area status and door status.

Keypad Alert Tones

Graphic keypads emit several distinct tones to alert you to particular system events. The keypad volume level can be adjusted if required. See Devices-Commands-Volume menu in panel programming.

Note *Setting the keypad volume to off will also stop the key press beep during normal operation.*

Keypad Alert Tones	
Event	**Alert Tone Emitted**
Fire Alarm	If the system registers a fire alarm, the reader will sound 3 short beeps followed by a 1.5 second pause. This will repeat until reset by the user or until the siren run time expires.
Burglary Alarm	If the system registers a burglary alarm, the keypad will sound a continuous siren tone until reset by a user or until the siren run time expires.
Trouble	If a system trouble condition occurs, the keypad will sound 4 x fast short beeps followed by a 5 second pause and will repeat this tone until the user acknowledges the trouble condition from a display keypad
Key Press	The keypad will sound one short beep every time a button is pressed.
Exit Delay	The exit delay warning will sound 1 short beep every second when the area the keypad has been assigned to is armed. During the last 10 seconds of exit time the warning tone will speed up indicating that the time has nearly expired.
Entry Delay	The hi/lo entry delay warning tone will sound once every second when an entry delay zone in the area the keypad has been assigned to is triggered. If the system is not disarmed before the entry time expires then an alarm will occur.
Error	If you press an invalid button during any data entry sequence, the keypad will sound a 2 second warning tone indicating that the command was not accepted.
Chime Alert	If chime mode is active then the keypad will sound fast short beeps to alert the user when a zone programmed for chime is opened. Chime mode is only applicable when the area is disarmed.

Table 8: Keypad Tones

Note *Keypads alert tones can be disabled if required. See the Devices-Keypads & Readers-Indicator Options menu in panel programming to disable these features.*

Egress and Lock Control

Smart Card enabled graphic keypads include an egress input and a lock output which can be used to simplify the wiring when the keypad is being used for door or access control.

The lock output consists of a protected open collector transistor that can be used to operate a relay to control the door lock. The output will go from open to low for fixed 5 seconds whenever the associated access group or door assignment is triggered.

Note *The on board lock output will operate for a fixed time period of 5 seconds when triggered. If a different time is required then you should use another output on the system to operate the door lock.*

The lock output, and LAN+ power supply are not designed to operate and power the door lock directly. You should always fit a relay and protection diode to the lock output in combination with a separate power supply.

The optional CM444B Relay Module has been designed to suit this task. If you require the door to operate when the mains power has failed then you will also need to fit a battery backup to the external power supply. See the wiring diagram in Figure 9: for more details.

The Egress input allows you to simplify the wiring required to implement an egress button on the inside of

the door. The egress input triggers the lock output on the keypad by operating or firing the associated door assignment.

The egress input should be connected via a momentary or push button switch to keypad ground. When the button is pressed the lock output on the keypad will trigger for a fixed 5 second period.

For greater security, if the egress input is not being used it should be disabled via panel programming.
See Devices-Keypads & Readers-General Options in panel programming.

Note *Any zone on the system can be configured to trigger a door and can therefore also be used to operate the lock output on the keypad.*

Wi-Fi Keypad Setup

With the introduction of the new Wi-Fi Keypad, MENU 6-1-9 > Wi-Fi Settings has been added to the Solution 6000 v2.25.

Devices > Keypads And Readers > Wi-Fi Settings

Wi-Fi Settings I-M	**MENU 6-1-9**
SSID Scan	
SSID	
Security	
Password	
IP Address	
Subnet Mask	
Default Gateway	
MAC Address	
IP Options	

This menu option is only available when the system detects that a Wi-Fi enabled keypad is installed on the system.

Wi-Fi enabled keypads include two new symbols which indicate the connection state between the keypad and the customers wireless access point. A Wi-Fi symbol will be displayed on the keypad display after the system has logged onto your local Wi-Fi network.

Figure 8: Wi-Fi Signal Indicators

A brief description of the options available are listed below. For more information refer to the control panel installation manual.

SSID Scan

This option will request the system to create a list of all SSID's currently in range of the Wi-Fi keypad. Use the down arrow key to step through the available SSID's and press OK to select the required station.

The SSID scan also displays the signal strength for each station in dB's (Decibels). To ensure reliable Wi-Fi performance do not attempt to connect the keypad the a station with a signal strength lower than -65dB.

Note *The lower the number the better the signal strength is. For example -25dB is better than -55dB. If the signal strength for the required station is higher than -65dB you should consider relocating the keypad or using a Wi-Fi range extender.*

SSID

This option allows the installer or master user to manually enter the required SSID. This typically will need to be done if the SSID is not being broadcast by the wireless access point.

Security

From the list select the Wi-Fi Security option currently in use on the customers wireless access point. If you perform a SSID Scan (see above), the control panel will automatically detect the security option required and you wont need to set this option.

Password

Enter the customers Wi-Fi access password. If the customer is using WEP Security (Not recommended) then the Wi-Fi keypad will support 64bit and 128bit passwords only.

WEP Password Length	HEX	ASCii
64 Bit	10 Characters	5 Characters
128 Bit	26 Characters	13 Characters

Table 9: WEP Password Length

IP Address

If the customer site is using DHCP there is no need to enter anything in this location. If you are not using DHCP then you should enter the assigned IP address for the Wi-Fi keypad here. You will also need to enter the Subnet Mask and Default Gateway addresses.

Subnet Mask

Only enter when not using DHCP.

Default Gateway

Only enter when not using DHCP.

MAC Address

This location is read only and cannot be changed. The MAC address of the Wi-Fi keypad is displayed here.

IP Options

Various IP options can be configured to allow the system to display and or report IP related fault conditions.

Display Faults

Setting this option allows the keypad to display a trouble condition if the control panel detects Wi-Fi Keypad's IP address has changed, if there is no IP connection, if there is an IP lockout or an IP conflict.

Report Network Lost

Setting this option allows the control panel to report when it detects that the Wi-Fi keypad can no longer detect a Wi-Fi signal from the local wireless access point.

Report IP Conflict

This option allows the control panel to report an IP conflict via the dialler when it detects two computers on the LAN or internet have been assigned the same IP address.

Report Poll Fail

This option allows the control panel to report via the dialler when the Wi-Fi keypad fails to send a poll to the base station.

Report Module Missing

This option when set allows the control panel to send a trouble report when the control panel detects that the ethernet module is missing or when the module is rebooting for any reason. A restore report will be sent when the control panel detects that the module has returned to normal.

Configuration Examples

Alarm control function only.

1) Install the keypad as per instructions.
2) Set the home area for the keypad.
3) Set keypad options as required remembering to disable keypad emergency alarms and or single button arming if the unit is being installed externally.
4) Assign users to the area.

Access control function only.

1) Install the keypad as per instructions.
2) Set the door assignment for the keypad.
3) Set keypad options as required.
4) Set output to door to operate door.
5) Set output event assignment.
6) Assign users to the access group.

Both Alarm and Access control functions.

1) Install the keypad as per instructions.
2) Set the home area for the keypad.
3) Set the door assignment for the keypad.
4) Set keypad options as required remembering to disable keypad emergency alarms and or single button arming if the unit is being installed externally.
5) Set output to access group to operate door.
6) Set output event assignment.
7) Assign users to the area.
8) Assign users to the access group.

Box Contents

Keypads are supplied with the following parts.

Keypad Main Unit With Door
Keypad Mounting Plate
Instruction Sheet
Emergency Key Sticker

CP799B
Service Keypad Installer Tool

Service Keypad Installer Tool

The CP799B Service Keypad has been designed to assist the installer or service technician when working on selected Solution control panels.

The keypad can be temporarily plugged onto any module on the system that has a service port header via it's built in 1.5m lead.

CP799B Compatibility	
Panel	**Supported**
Solution 6000	2.16

Table 10: CP799B Compatibility

Once connected it allows the installer to easily log into programming mode, interrogate zone or output status, review the history log and perform other functions as if they were using the main keypad.

This is particularly useful in large installations where a number modules are dispersed around the building or in separate buildings and the main system keypads are located some distance away.

Addressing

Unlike other keypads, the service keypad does not need to be addressed which means there is no need to scan the LAN for the system to recognise it. Built in security means that the system will only respond to the service keypad if the panel has been placed in service mode from one of the main keypads or if the panel cabinet tamper input is unsealed. Service keypad operation will cease when service mode ends or the cabinet tamper is sealed.

The CP799B keypad includes a built in DF smart card reader allowing RFID cards and tokens to be easily enrolled directly at the keypad if required. Alpha text characters have also been included on the keypad buttons which will can help to speed up text entry at the keypad.

Note *You should always exit programming mode via the service keypad before disconnecting it from the system. Failure to do this may prevent the system from arming because programming mode is still active.*

Features

- **Plug On Connection To Modules With Service Ports**
- **No Need To Assign A Keypad Address**
- **Alpha Characters On Keys To Aid Text Programming**
- **Operates When System In Service Mode**
- **Operates When Cabinet Tamper Is Unsealed**
- **Allows Programming At The Panel During Install**
- **Flexible 2 Metre Connection Lead**
- **Leads Can Be Easily Replaced When Needed**
- **Built In Smart Card Reader Simplifies Enrolment**
- **3 Year Factory Warranty (Return To Base)**

Connection Diagram

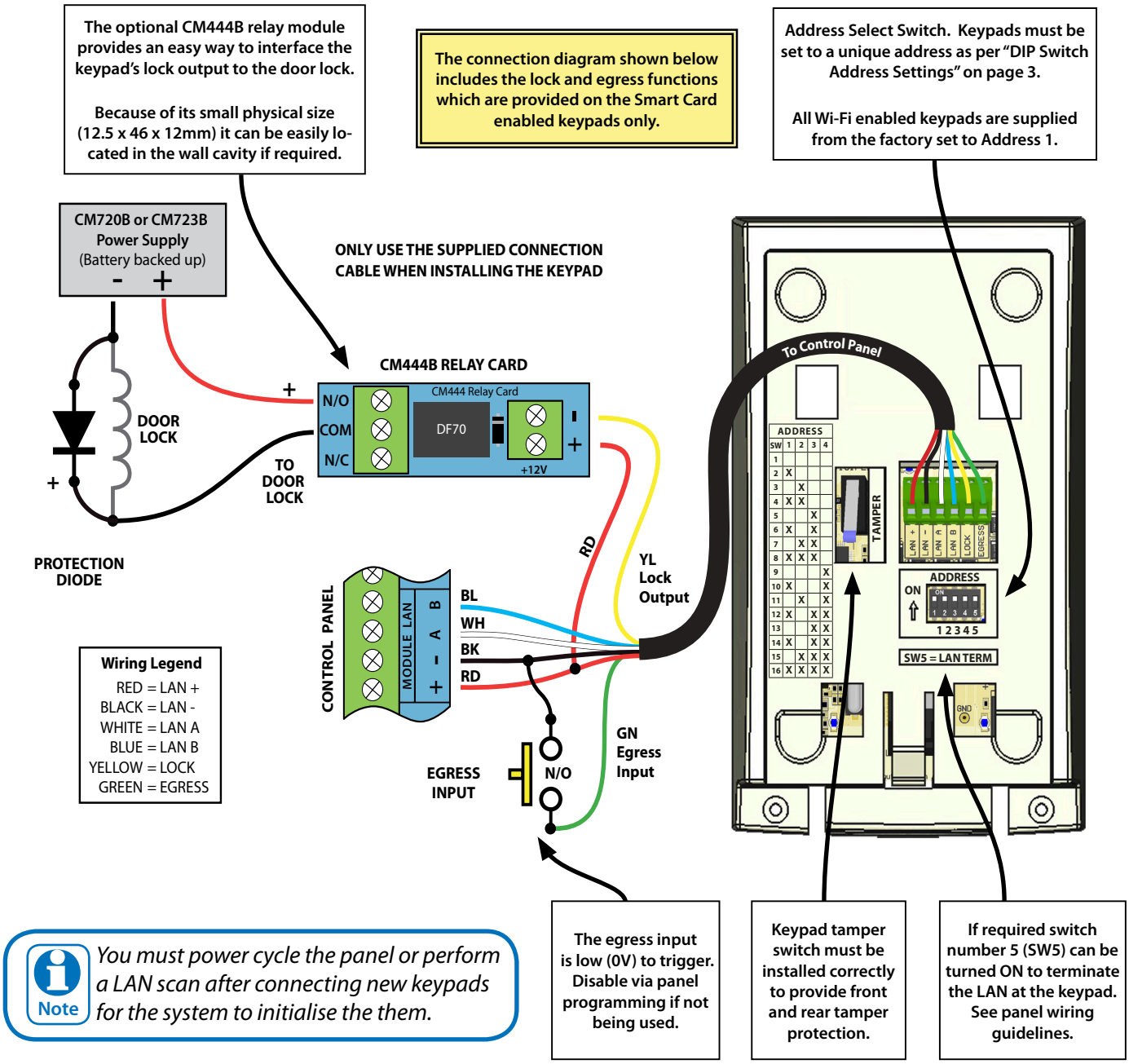

Figure 9: Keypad Connection Diagram

Specifications

Part Numbers:	CP700B - CP710B- CP722B - CP723B - CP741B Graphic Keypads.
Operating Voltage:	10.0V D.C. - 14.5V D.C. @ 100mA Max.
Module Connection: (RS485 LAN)	Max total LAN length using multi strand security cable = 500m, Max total LAN length using 2 pair twisted shielded data cable (Belden 8723) = 1200m. See full control panel manual for complete wiring instructions.
Lock Output:	Protected open collector transistor output 500mA.
Egress Input:	Low to trigger. Can be disabled via software control.
Dimensions:	92mm(W), 20mm(D), 132mm(H). CM444B = 46mm(W), 12.5mm(D), 12mm H)
Environment:	-30˚ to 55˚C RH 5 to 85% at 30˚C non-condensing.
Fixing Method:	Keypads should be mounted on a sturdy vertical wall using fixtures appropriate for the wall construction type. See instructions for correct tamper installation.
Warranty:	3 years from date of manufacture (return to base).

N12138 N12138 TELEPERMIT CE RoHS

In the interest of ongoing product development this document is subject to change without notice.

Bosch Security Systems
Level 2, 21 Solent Circuit
Baulkham Hills, NSW 2153
Australia
Phone: 1300 026 724
www.boschsecurity.com.au

Graphic Keypads BIRG

Issue FTR1.0

BOSCH