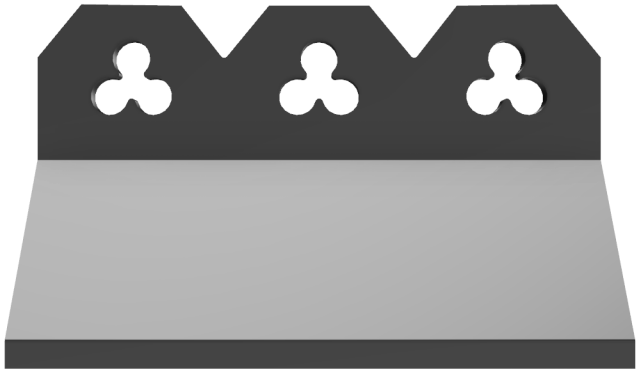

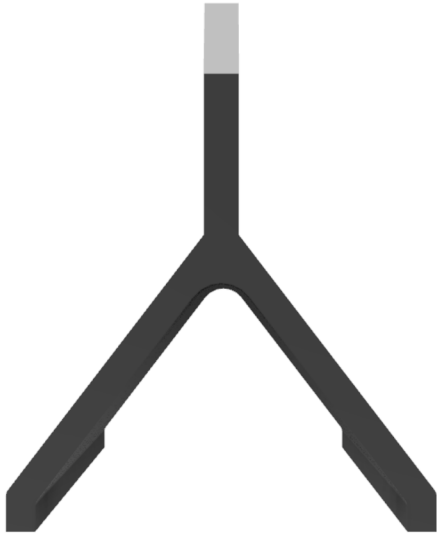

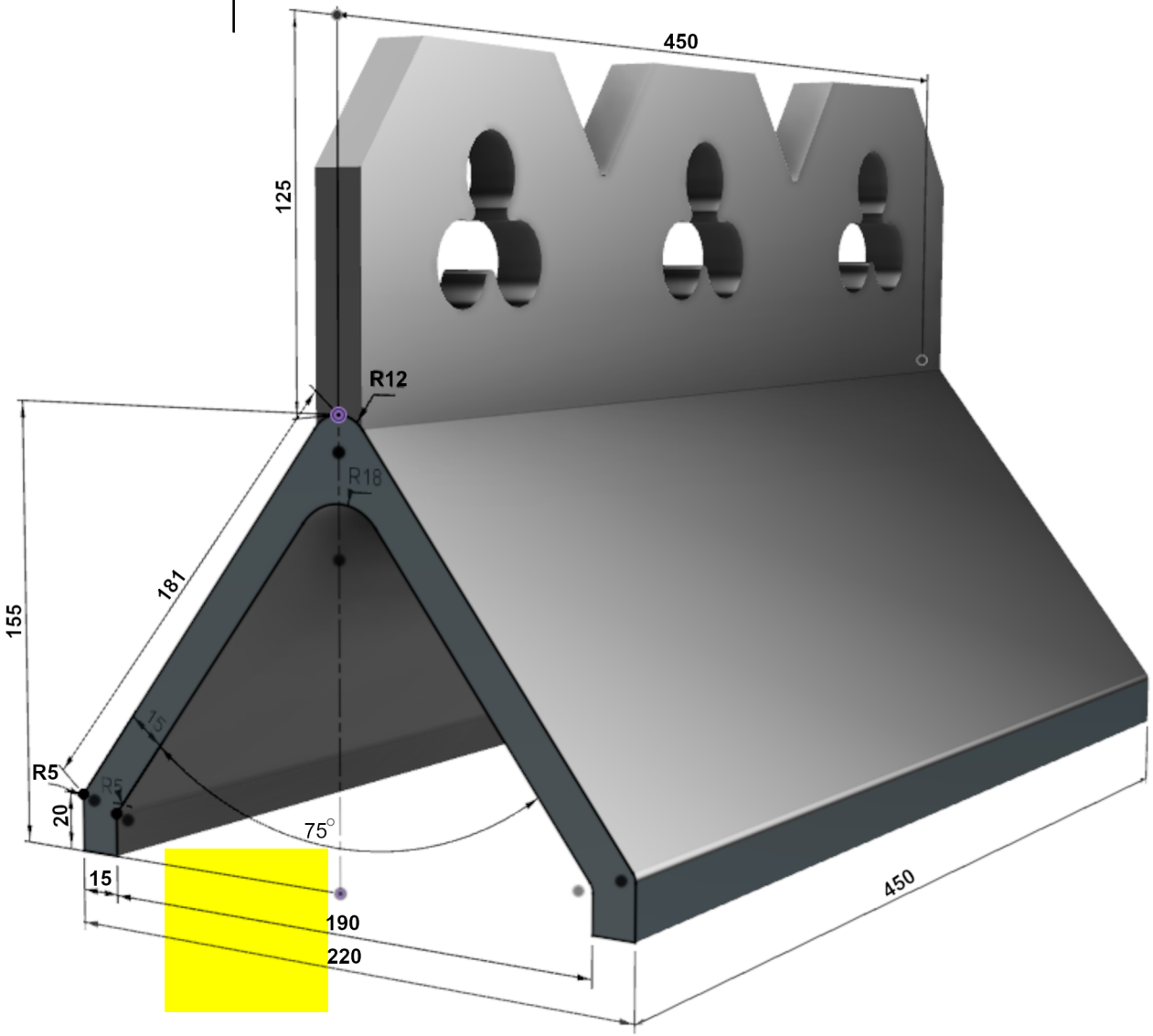

ROCK ROOFING PRODUCTS

75° Plain Angled Ridge
3 Hole

Slight tolerances must be allowed when using these measurements as our products are handcrafted.

Product Specification

Avg Weight: 5.4 Kg
Width: 220 mm
Wing: 181 mm
Length: 450 mm
Height: 155 mm
Angle: 75°

Colour Range

A 2 part paint mix is used, slight variances in tone may be present

Terracotta Red
Old English
Clay Red
Warm Grey
Light Grey
Buff

We recommend using rock ridge kits for dry fixing to comply with BS5534 standards.

Available Colour Range - We may be able to accommodate more. Please contact us to enquire

Swatches are a guide only. Refer to our website for representative photos.

Please contact us for required quantity

Min roof pitch - 15°
Max roof pitch - 52.5°