0.9° SLIM POWER

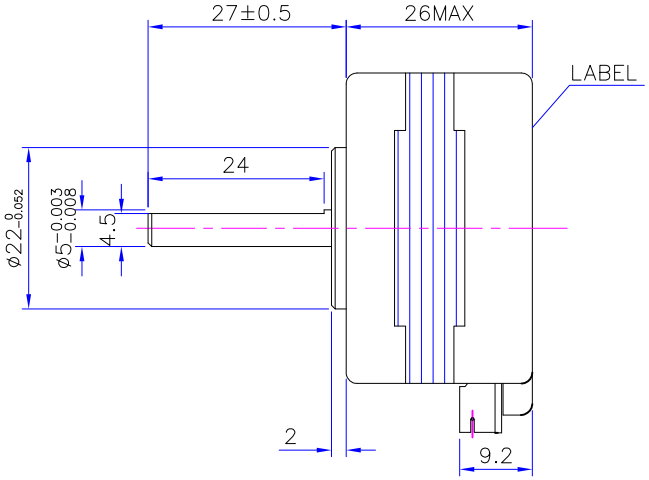

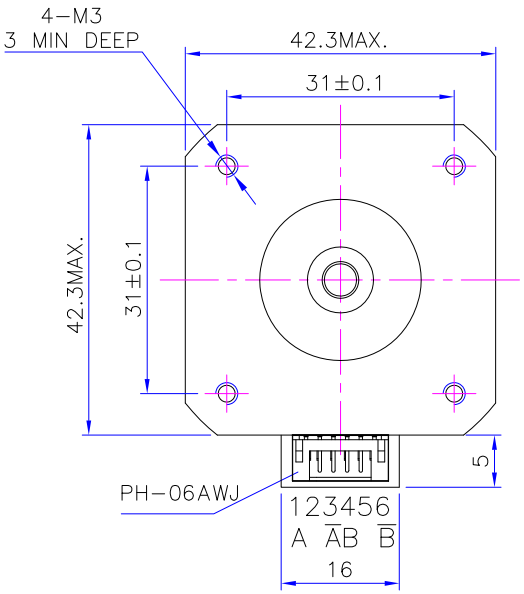

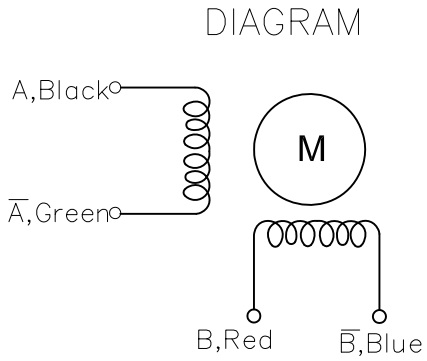

Supply with detachable cable.

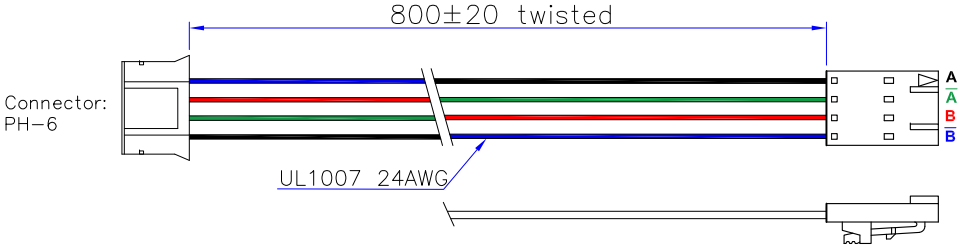

Connector: Molex 50-57-9404, or Equivelent. (with locker tab)

Label by laser print

LDOMOTORS.COM

0.9° Slim Power Stepper

LDO-42STH25-1404MAC #YYMMDD

0.9° SLIM POWER

Items	Specs	Items	Specs
Phase Number	2 phases	Rotate Direction	A-B-Ā-B̄-A CW
Step Angle	0.9°±5%	HI POT	AC600V/1mA/1S
Resistance	2.4±15% ohm	Insulation Resistance	≥ 100 MΩ(DC 500V)
Rated Current	DC 1.4 A /Phase	Insulation Class	Class B
Holding Torque	≥18N.cm	Weight	0.15 Kg REF.
Inductance(1Khz)	5.5±20% mH		

REV	ECN NO	Description	Made by	Approve	Date
B	---	Cable update.	SD XU	J.B.	2/11/19
A	---	New Release	SD XU	J.B.	1/30/19

LDO MOTORS

Scale

LDO MOTORS CO.,LTD

Hybrid Stepper Motor
LDO-42STH25-1404MAC

Des.	Check	Appr.	Date	Factory Code	217HTNB2002-27	page