BAI 1232

HAND MADE STAINLESS STEEL SINK Dimensions: 47 1/4in.L x 20in.W x 10in.H

Model: KS-SS1232SL Material: SUS304 16Gauge

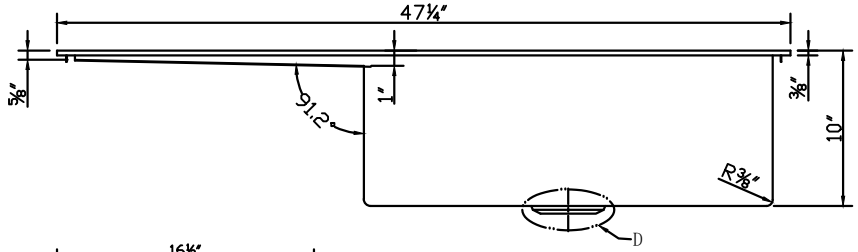

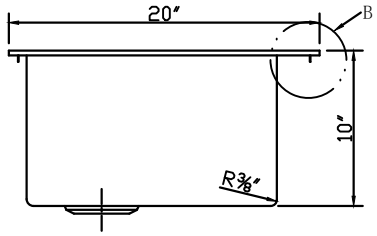

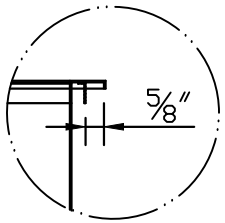

B=B
2:1

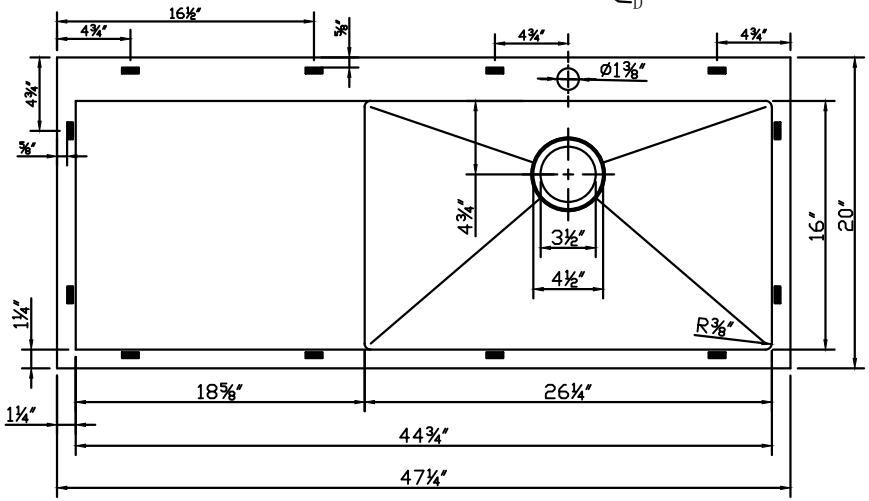

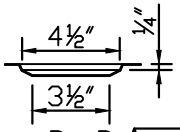
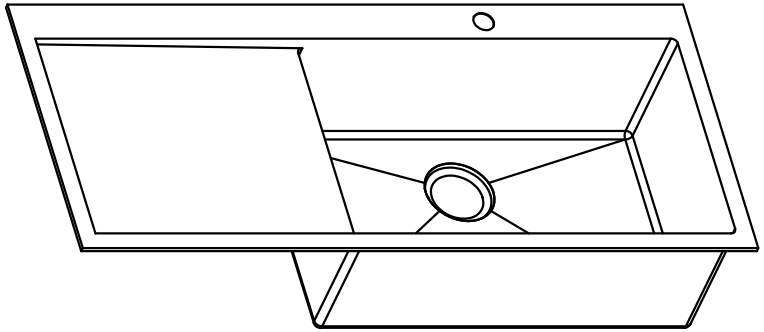
D=D
2:1