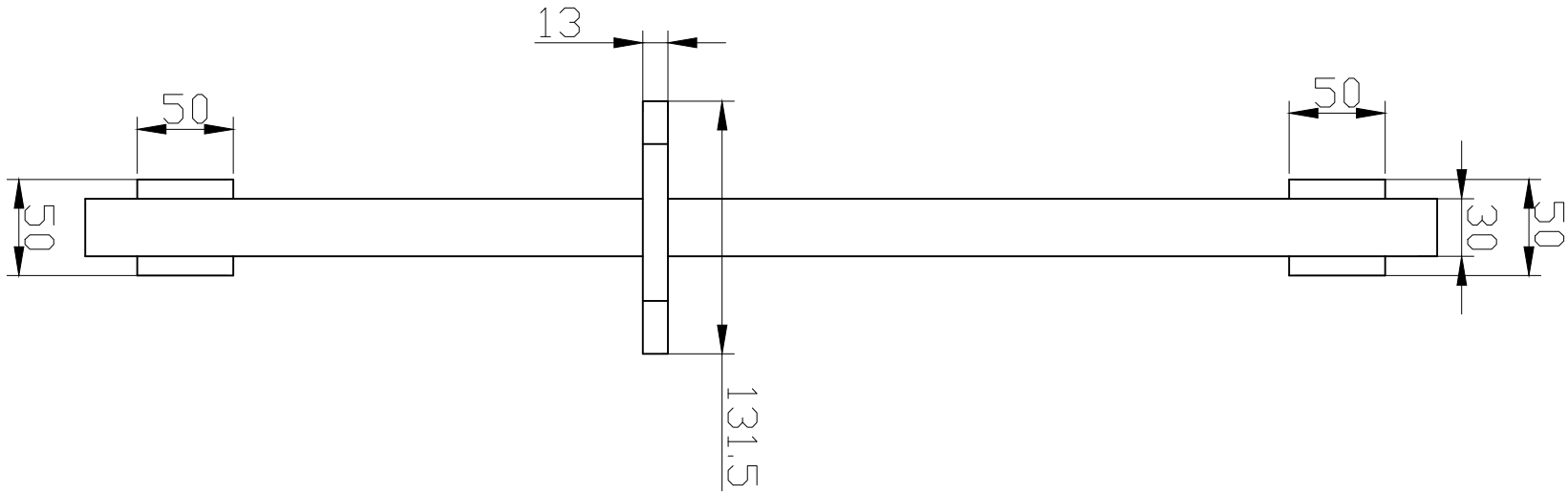
13
50
50
50
30
50
131.5

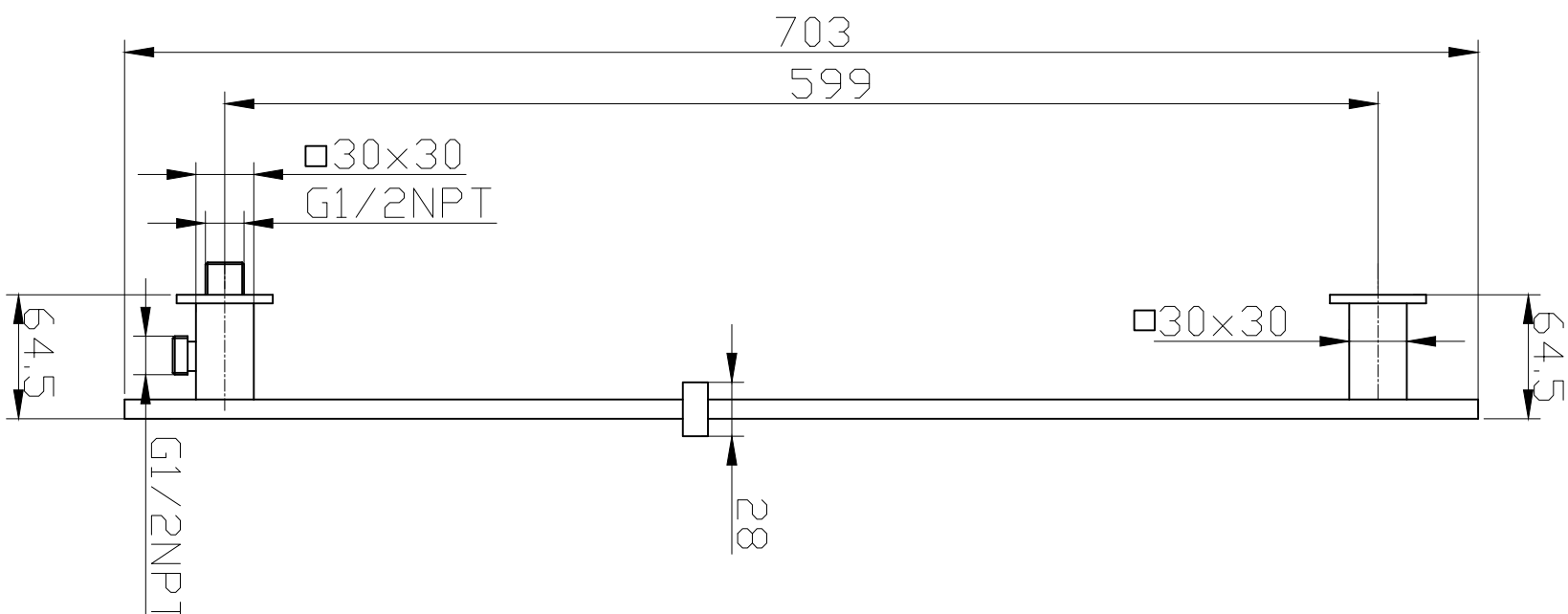
703
599
□30×30
G1/2NPT
64.5
□30×30
64.5
G1/2NPT
28