WARMFLOW

Mains Pressure

Indirect Coiled Duplex Stainless Steel Domestic Hot water Cylinders

Technical Information

Distributor NZ:
Tradepoint LTD (HeatIQ)
P.O Box 530 Wanganui
PH: 06 344 7392
sales@heatiq.co.nz
www.heatiq.co.nz

Heat IQ
We Know Heating

Specifications within this document may be subject to change without notice

WARMFLOW

Pipe connection dimensions ; Refer also to manufactures booklet included with the cylinder

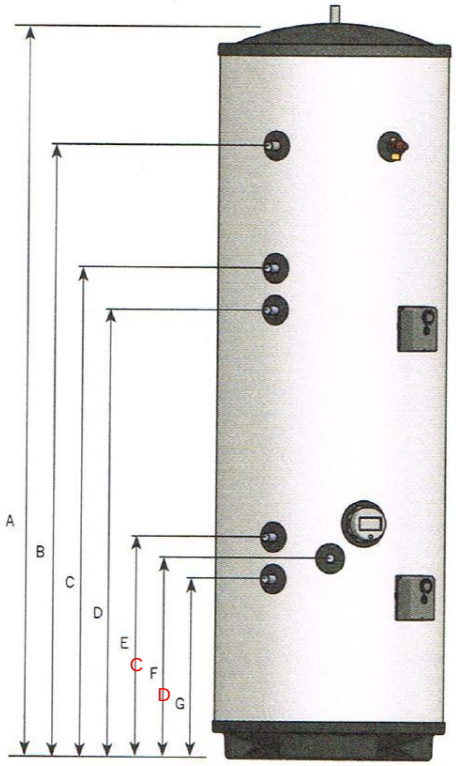

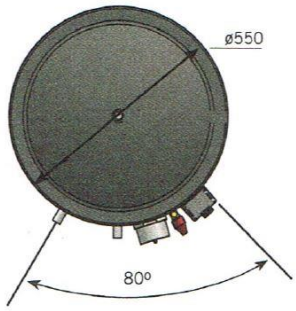

Twin Coil		250L	300L	Single coil	210L
A	Height (note top hot outlet)	1767	2077	A	1517
B	Secondry rtn	1473	1783	B	1223
C	Primary coil upper connection	1078	1388	C	* 532
D	Primary coil lower connection	978	1288	D	* 482
E	Renewable coil upper connection	532	532	E	432
F	Cold inlet connection	482	482		none
G	Renewable coil upper connection	432	432		none
Primary coil rating at 15L per Min		20.2	21		19.9
Second coil (renewables)		22	20.7		N/A

Duplex Stainless steel inner tank

With White steel shell Base and cap in molded plastic with integral foot.

- Lighter weight due to advanced polyurethane thermal shell with higher heat retention
- Expansion vessel to minimize cold relief - Requirement of warranty
- Pressure limiting, Valve kit and Element included
- Reticulation return connection provided as standard
- Low energy reticulation pump Kit available as an option

Please read and follow these instructions with care. Any damage resulting from failure to do so will void any liability and or warranty claim. Warmflow Cylinders must be installed and commissioned by suitably qualified contractor. The installing contractor assumes responsibility for the correct and compliant installation of the cylinder and associated component requirements.

Warmflow Cylinders are designed and manufactured to NZ Standards and the Minimum Energy Performance Standards (MEPS) as specified by AS/NZS 4692.2. Though as a Cylinder which is not designed for electrical heating as the primary input MEPS is not a requirement for this Cylinder

Warmflow cylinders are guaranteed in NZ for 10 years from date of purchase against failure due to defective materials and or workmanship. Warranty is applied Pro Rata. Failure within 5 Years 100% of original purchase cost, There after we cover Original cost less 15% per year for each year after the 5th year.

Repair or replacement of a defective appliance is at our discretion. Labour to remove or install is not covered by this warranty. (See full warranty details of distributor)

Failure due to chemical reaction, poor or aggressive water quality or any other substances introduced through the water supply or otherwise is excluded. (see notes at rear)

Failure due to incorrect inadequate or noncompliant installation, use of incorrectly rated valving or modification of any cylinder is not covered by the warranty.

The Electric elements and thermostats with this cylinder are guaranteed for 1 year from date of purchase.

Cylinder Warranty is limited to 1 year in all commercial applications

Warmflow Duplex Stainless Steel DHW cylinders are available in sizes 210, 250 and 300 liters. These Cylinders are designed for applications where the heating coils withing them are the primary heat source , the coils are for boiler, heat pump or solar input. **The coil/s must be on a pumped circuit**

THE COILS IN THESE CYLINDERS ARE NOT SUTABLE FOR WETBACK THERMOSYPHON SYSTEMS

Maximum permitted Relief temperature and pressure is **95°C and 700 kPa**.

Cylinders feature high retention lightweight polyurethane with a colour steel outer shell. All connections adopt spigot termination for higher insulation of connections and easy joint fail visibility

Cylinders are supplied complete with:

- 1 x 700 kPa TPR valve and Tundish
- Inbuilt thermostats for each coil
- 1 x 3 kW High Grade Incoloy Electric Element with thermostat for secondary back up heating
- A secondary return port for DHW reticulation
- Off the ground foot for greater resilience to deterioration
- A ¾" BSP connection kit
- Inlet valve set with 3 Bar limiting - This must not be exceeded & 600Kpa expansion relief, strainer, check valve, balanced cold output

Warmflow Cylinders must be installed in accordance with NZS 4607.

Valves and components

Valves and safety devices must be installed as required by G12 of the New Zealand Building Code. Tempering valves must be used to comply with NZS 4617 or AS 1357.2. All components, installed, must be accessible for inspection, maintenance and removal.

A cylinder drain must be provided with an isolation valve and terminate with a cap or plug, if terminating outside the building, a cap only.

A suitable Safety drain tray not supplied, must be installed under the cylinder.
We accept no liability for damage where a drain tray is not used

The expansion vessel supplied with these cylinders minimizes cold relief, saving water, it must be fitted, warranty is void if not installed.

Temperature and Pressure Relief (TPR) supplied, is designed to relieve excess pressure to ensure no risk of explosion. TPR valve is designed to keep the maximum water temperature below 99°C. Drain lines from the TPR valve must be copper and discharge via the provided tundish to an appropriate place that does not cause damage to the building. (The tundish supplied is capable of withstanding 99°Cwater.)

The provided inlet valve set must be used.

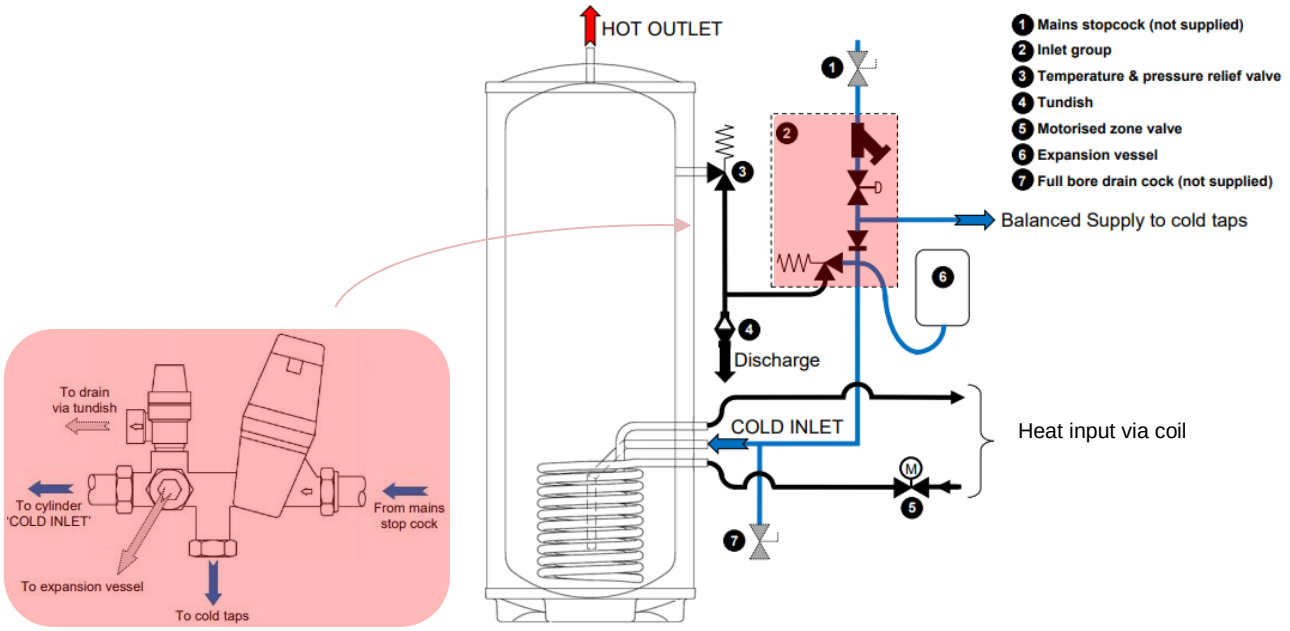

Restraint

Cylinders must be adequately supported and restrained to resist earthquake forces. Water heaters up to 360l capacity may be restrained according to Acceptable Solution G12/AS1 below, alternatively, in accordance with Section 203 of NZS 4603

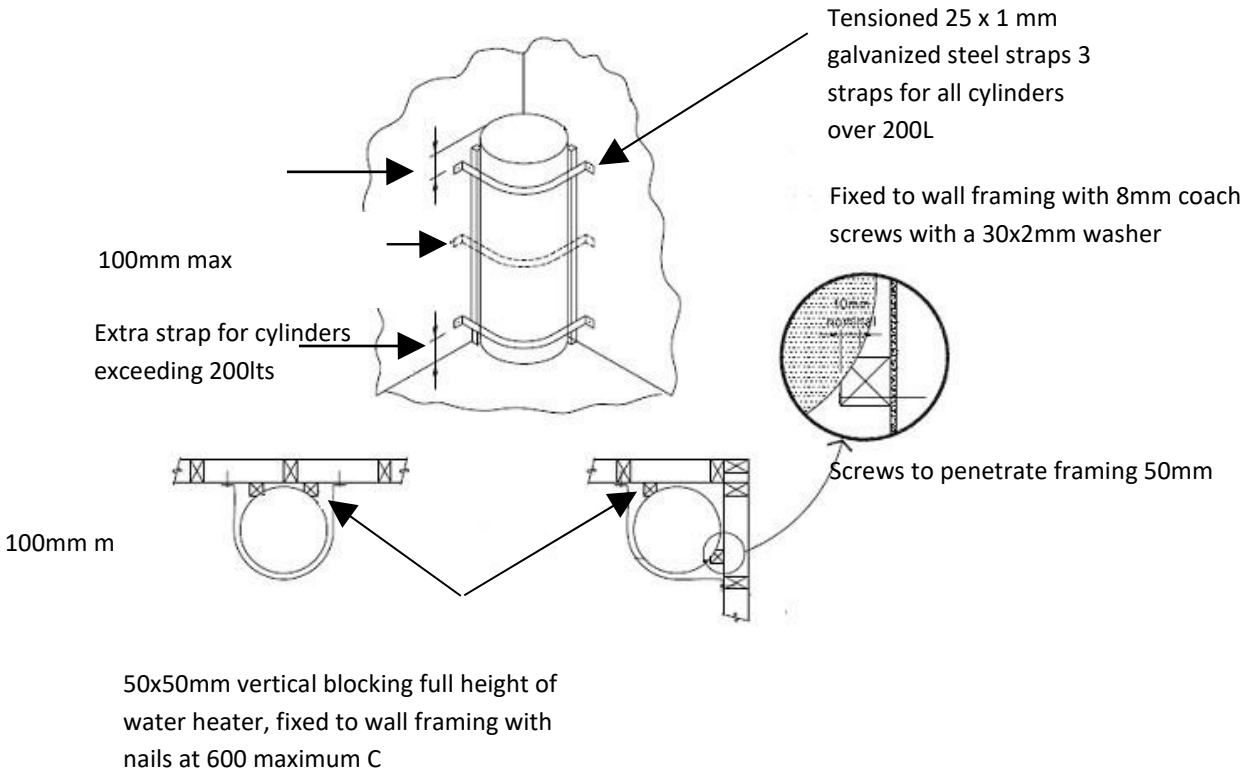

Schematic restraint diagram, does not show the required drain tray.

Electrical installation

Must comply to AS/NZS by a suitably qualified contractor.

Cylinders are supplied with a 240V, 50Hz, 3kW Incoloy electric element/s. Please refer to the wiring diagram supplied inside the element cover. An adapter for 11/4" elements is available to order

Element supply cable size is to be determined by the installing electrician, Under NZBC G9 earth bonding may be required.

Insulation:

Un-insulated Hot water pipework has a significant influence on energy use
We highly recommend that all hot water pipe work and all exposed connections are insulated.
Keep all pipe runs direct and as short as possible

Commissioning

The water heating appliance and any HX coils **must be flushed** to remove any debris that may have entered the system prior to or during installation. **Failure due to contamination is not covered by warranty**.

Initial filling, open the inlet valve and a hot water tap until water flows out, monitor the cylinder and associated system throughout the filling process

After filling the main body, perform a pressure/leak test.

Ensure the heat input coils are connected as required to their appropriate source and if applicable suitable running pressure.

Poor water quality

Failure due to the following water quality issues is not covered under warranty.

PH below 6.5
Chloride over 250mg per liter
High dissolved solids -500/1000Mg/L – Galvanic corrosion
Stagnant water
Brazing flux sediments
Flushing chemical residues
Metallic debris in the supply

Water testing can be sought from Citlab - If in doubt check!

Heat IQ
We Know Heating

WARMFLOW

Technical Data

Technical data									
Volume (l)			210		250		300		
Height (mm)			1517		1767		2077		
Diameter (mm)			550		550		550		
Weight (kg) full			250		290		350		
Primary coil rating 15L min /KW			19.9		20.2		21		
Secondary (renewable) coil rating			95		22		20.7		
Heating time EN12897 mins			31		34*/23		22		
Standing heat loss (kwh/24Hrs)			**1.56**		**1.92**		**2.07**		

Format options : 210L single coil only – 250L *single coil or double coil option – 300L twin coil only

Input coils are high gain coil in coil format, not to be connected for Thermosyphon systems

input data for HX coils	
Maximum Working Pressure	700 kPa
Maximum Working Temperature	95 °C
Diameter	22 OD ¾" BSP

The expansion vessel supplied with these cylinders must be fitted warranty is void if not installed

Standard connections		
Description		
Cold water inlet		22mm / 3/4" BSP
Hot water outlet		22mm / 3/4" BSP
TPR valve connection		3/4" BSP
Secondary return		22mm / 3/4" BSP
Wetback flow		N/A
Wetback return		N/A
coil inlet 1		22mm / 3/4" BSP
coil inlet 2		22mm / 3/4" BSP
coil outlet 1		22mm / 3/4" BSP
coil outlet 2		22mm / 3/4" BSP
Electric element		13/4" BSP
Sensor pocket/s		Inbuilt thermostat

Insulation jacket: CFC/HCFC free with 0 Ozone depletion High Grade polyurethane exceeding minimum standard

Producer Statement

NZ Distributor

Tradepoint LTD (Heat IQ)
P.O Box 530 Wanganui
PH: 06 344 7392
sales@heatiq.co.nz
Web: www.heatiq.co.nz

Manufacturer/source
Warmflow engineering
Lisbon **Ireland**

Product Description:
Single and dual coil mains pressure cylinders
Capacity: 210l 250l 300l

Construction Material:
Duplex Stainless

These products are manufactured to the following standards:

Energy Efficiency Standard:	AS/NZS 4692.2 NZ MEPS
Manufacturing Standard:	AS/NZS 4692.1
Specific Requirements:	AS/NZS 2712 Clauses 2.7 /2.8 / 3.3 / 5.4.4

G12 AS1 does not cover cylinders with heating coils designed for boiler or solar heat input. Warmflow Cylinders are therefore an Alternative solution These cylinders are not intended for electric heating the element is for emergency back up only

Temperature Control Device to: AS/NZS 60335.2.21

Hydrostatically pressure tested Yes
Maximum Working Pressure: 700kPa
Production Date: As data plate
Product Warranty: 10 years on cylinder, 1 year on all other parts

Application of the correct **3 bar** inlet , **6 bar** cold relief and **7 Bar** Temperature relief valve train and pressure vessel is a requirement or warranty