Sol-Ark®
LIMITLESS POWER

5K-1P-N

Cloud Monitoring & Programming

Modes:
Grid Sell, Off-Grid, Meter Zero, Time of Use, & Peak Shaving

Sensors:
External CT Sensor, Parallel Comms/Battery Comms, Auto Gen Start

Battery Agnostic
48V Nominal & at least 50Ah

Single Phase Only

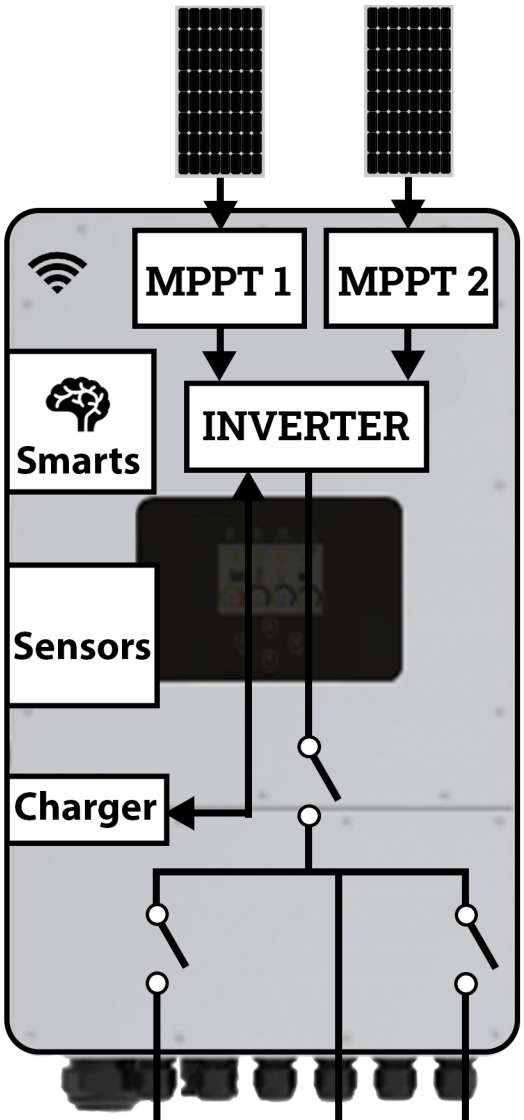

10.4kW DC Coupling
125V-425V @ 20A per MPPT

5ms UPS
No-Glitch Transfer

Time of Use
Use Batteries At Night to Minimize Grid Usage.

Gen Compatible
Portable or Standby Gens

AC Coupling
Retrofit Existing Systems

Grid or Generator
Passthrough
50A @ 120V

AC Output
4.8kW @ 120V