HYDRAULIC DISC BRAKE INSTALLATION & BLEED MANUAL

MADE BY

Karasawa

STATE BICYCLE CO.
WWW.STATEBICYCLE.COM
INFO@STATEBICYCLE.COM

SAFETY INSTRUCTIONS

You must read and understand the Safety Instructions document included with your product before proceeding with installation. Improperly installed components are extremely dangerous and could result in severe and/or fatal injuries. If you have any questions about the installation of these components, consult a qualified bicycle mechanic.

CONTENTS

TOOLS AND SUPPLIES

Highly specialized tools and supplies are required for the installation of your State Bicycle Co. components. We recommend that you have a qualified bicycle mechanic install your State Bicycle Co. components.

Model	Bleeding Block
HDM-1 HDM-/3E HDC-/3E	T=10mm for 1.8mm rotor (2 piston)
HDM-/5E HDC-/5E	T=10.3mm for 2.3mm rotor (4 piston)
HDR-3	T=10mm for 1.8mm rotor (2 piston)

HOSE SHORTENING TOOL

Order Number: 10.90.00010.000
Function: cutting hose/press in needle

DISC BRAKE INSTALLATION

6-BOLT ROTOR INSTALLATION

Install the rotor with the new, threadlock prepped rotor bolts. Tighten the rotor bolts one turn in an alternating sequence until a torque of 6.2 N·m (55 in-lb) is achieved for each bolt with T25 wrench.

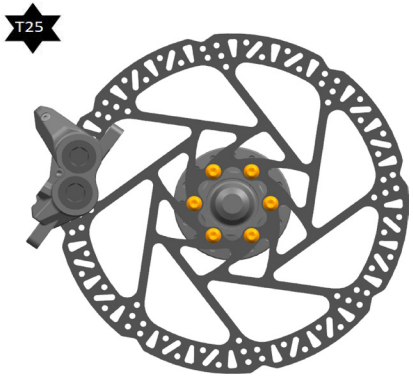

BRAKE LEVER INSTALLATION

Use 4mm Allen key to tighten the M5 clamp bolts with 4~6Nm torque

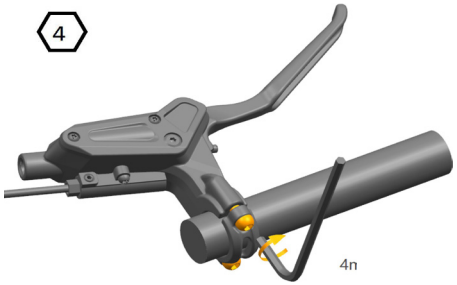

CALIPER INSTALLATION

Pull brake lever, use 5mm Allen key to tighten the caliper bolts with 8~12Nm. Must choose the correct bolt length for proper thread engagement. Riding a bike with improper bolt engagement can allow the brakes to disengage from the bicycle, which can lead to a crash and serious injury or death to the rider.

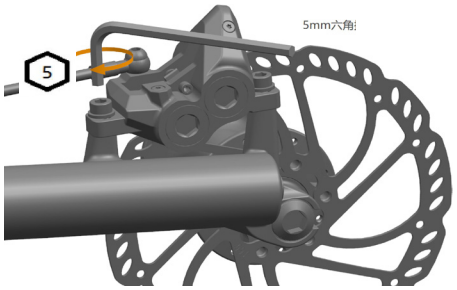

INNER ROUTING HOSE CONNECTION

Insert the hose through frame, use cross point screw driver to take out M2 screw, hold hose in right position to avoid mineral oil leak.

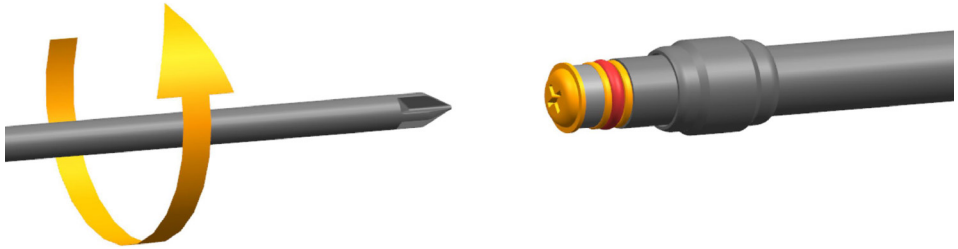

Insert Hose Boot, Compression Nut, Compression Fitting into hose in correct sequence.

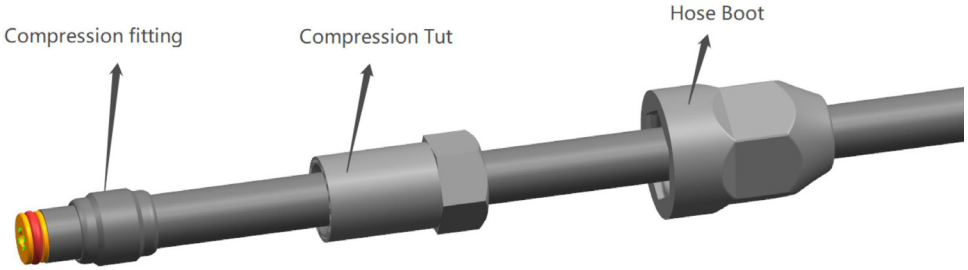

1. Remove the M8 screw with 5mm Allen key. Add few drops mineral oil if some was dripped out during process.

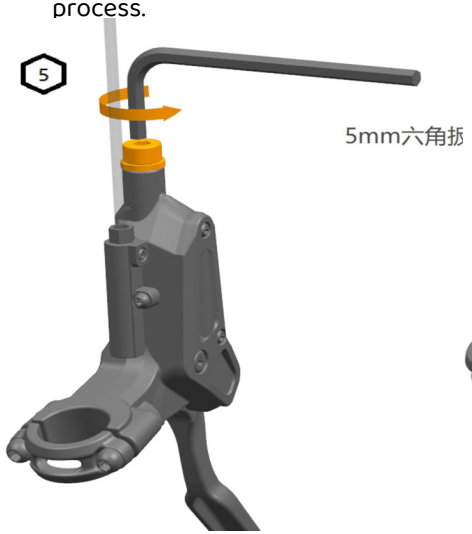

2. Insert the hose into brake lever hole until the hose touch the bottom surface, insert compression fitting, tighten the compression nut.

3. Hold the hose to have push in force to lever body, use 8mm spanner to tighten the compression nut with 7- 9N.m

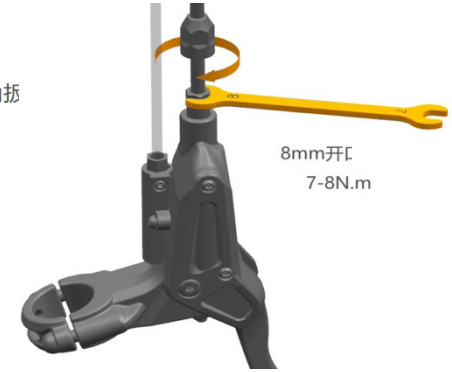

4. Hose boot assemble to compression nut

REACH ADJUSTMENT

Turn the reach adjust clockwise to move the lever blade away from the handlebar.

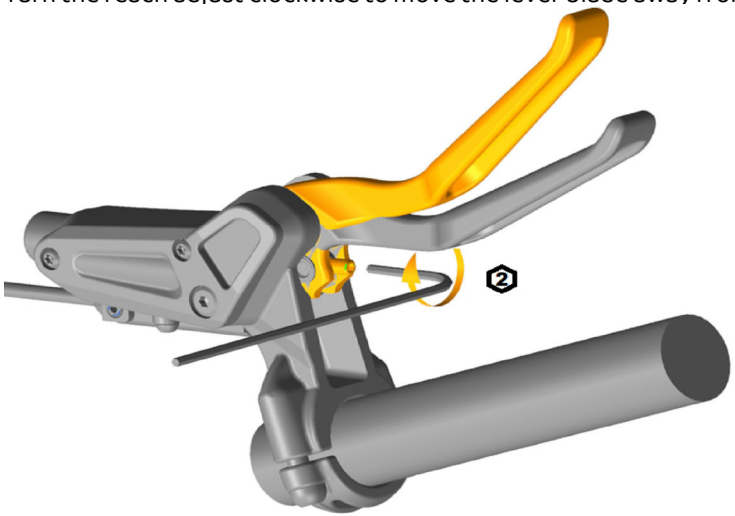

MINERAL OIL BLEEDING PROCEDURE

1. PREPARE THE SYRINGES

Thread a bleed clamp assembly onto a syringe plunger. Assemble two Mineral Brake oil syringes.

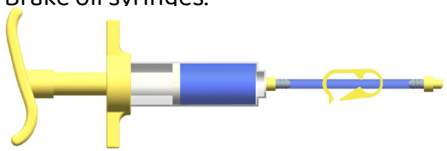

2. FILL SYRINGES WITH MINERAL OIL

Fill the syringe for the brake lever with Mineral Brake Oil until it is about 3/4 full. Hold the syringe upright, cover the tip with a shop towel, and depress the plunger just enough to remove any air bubbles. The syringe should still be close to 3/4 full.

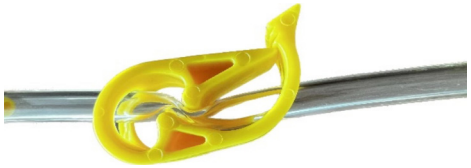

2.2 Close the clamp on both syringes

3. PREPARE THE CALIPER

3.1. Remove the wheel from the bicycle according to the wheel manufacturer's instructions. Do not allow mineral brake oil to come into contact with suspension seals, brake pads, or rotors. Clean contaminated rotors and seals with isopropyl alcohol. You must replace the brake pads if they become contaminated.

3.2 Remove the brake pads from the caliper and hold the bleeding block into the caliper

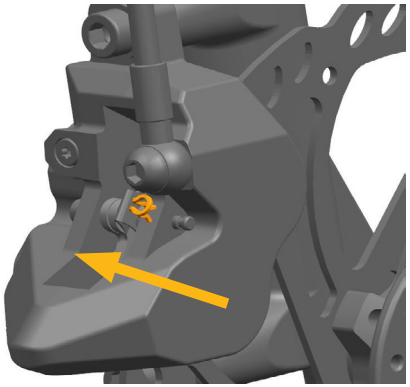

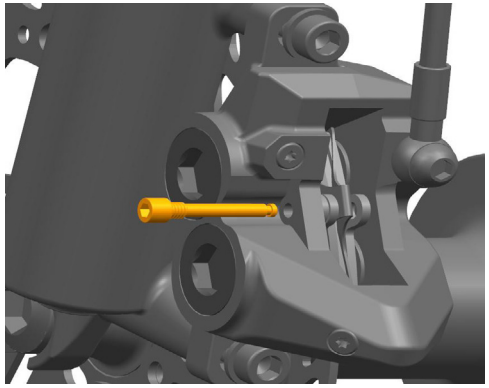

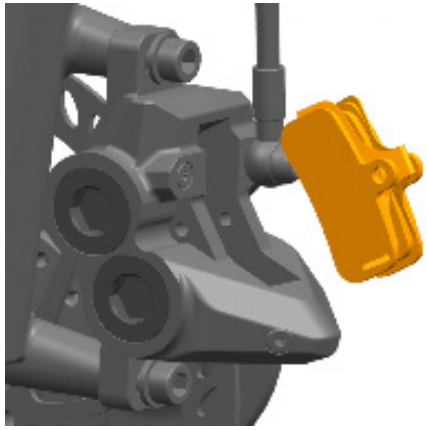

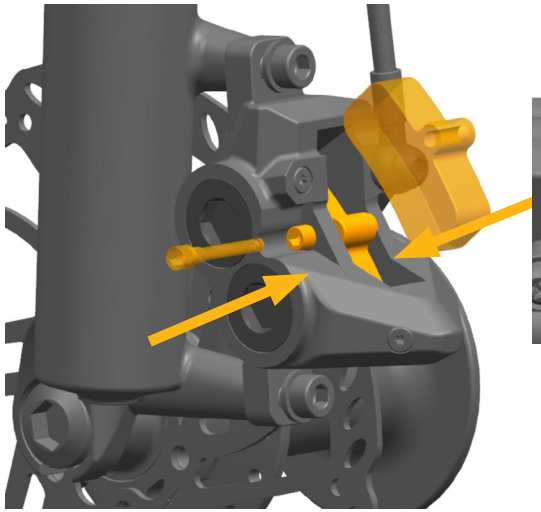

3.3 Use a T10 TORX wrench to remove the caliper bleed screw. Thread the empty syringe into the caliper bleed port.

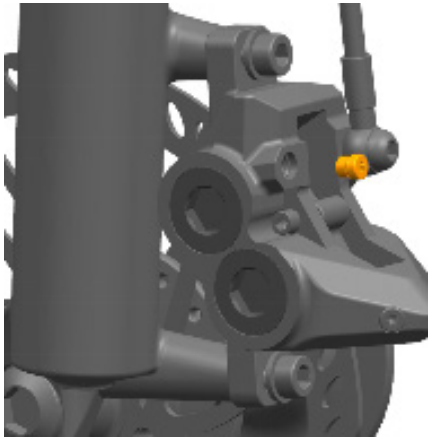

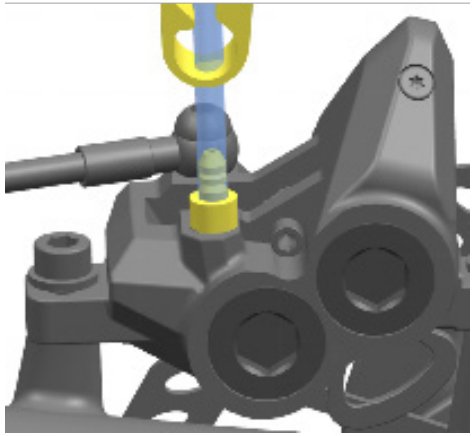

4. PREPARE THE LEVER

4.1. Use a T10 TORX to remove the bleed screw from the lever. Oil will drip out of the bleed port. Clean any mineral brake oil that drips from the bleed port with isopropyl alcohol and a shop towel.

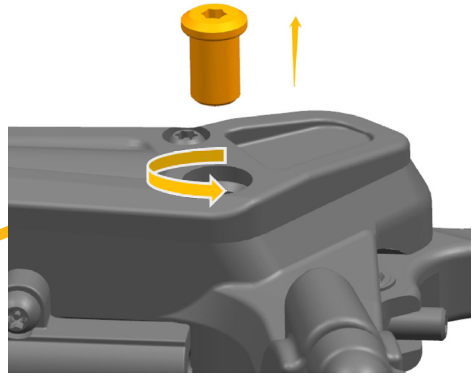

4.2. Thread the 3/4 full syringe into the lever bleed port.

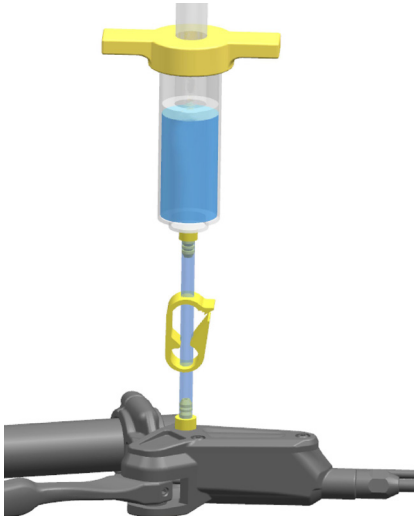

5. BLEED THE SYSTEM

5.1. Open the valve or the clamp on the syringe at the lever and caliper.

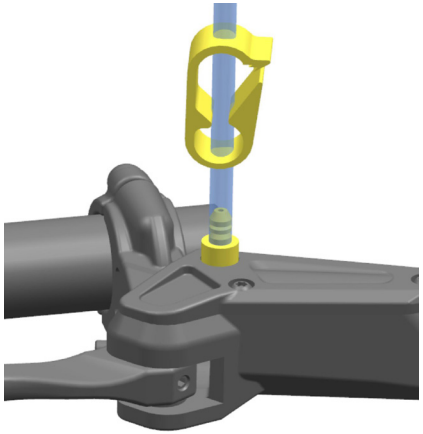

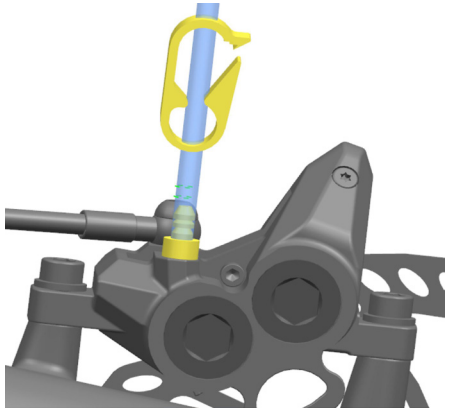

5.2. Hold the syringe vertically. Gently push the plunger down, stopping before air enters the hose tube. Oil will fill the syringe at the brake caliper. If the oil in the syringe at the caliper is discolored, continue to push all the oil out of the system. Restart the bleed procedure with new fluid in both Syringes.

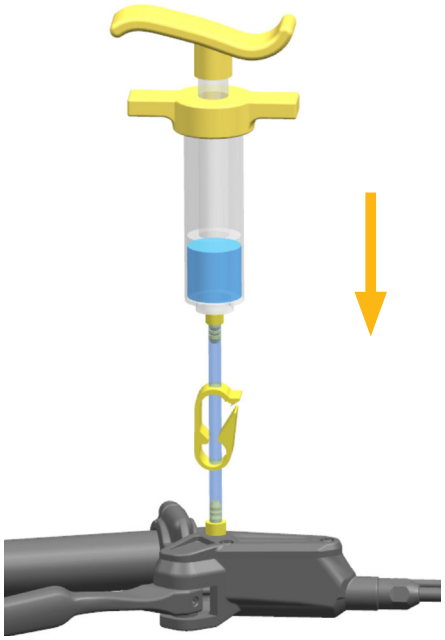

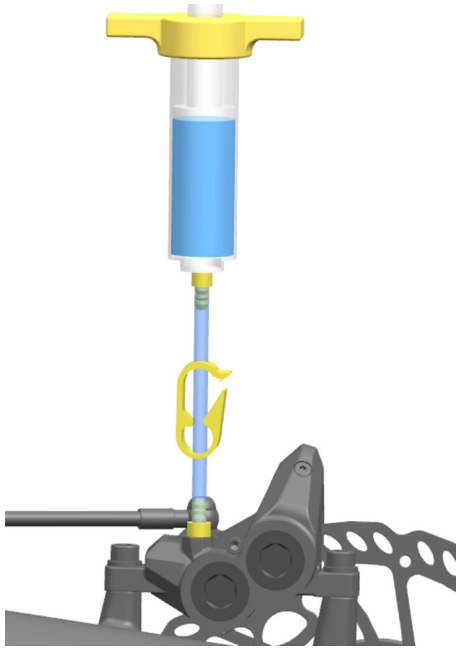

5.3. Hold the syringe at the caliper vertically while slowly pressing down on the syringe plunger at the caliper, push the oil located at the caliper towards the brake lever.

Stop before any air enters the hose tube at the caliper.

If needed: repeat steps 5.2 and 5.3 until only a small amount of bubbles appear.

5.4. Close the valve or the clamp at the caliper and the lever. Unthread the syringe from the caliper. Use a T10 TORX to install the bleed screw

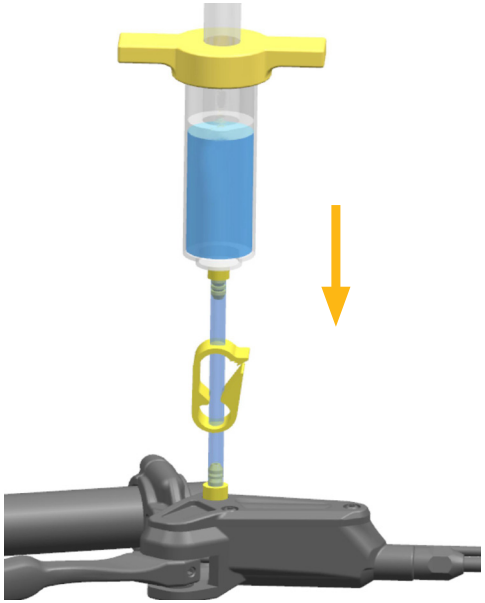

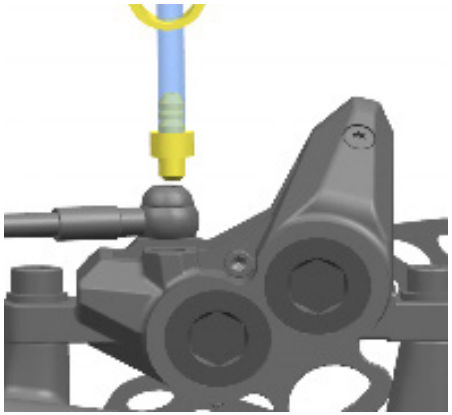

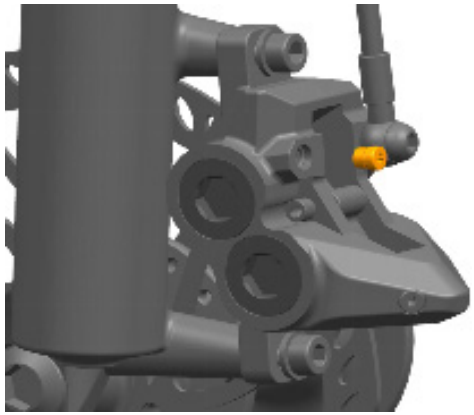

5.5. Open the valve or clamp on the syringe at the lever. Squeeze and release the lever blade 3-5 times.

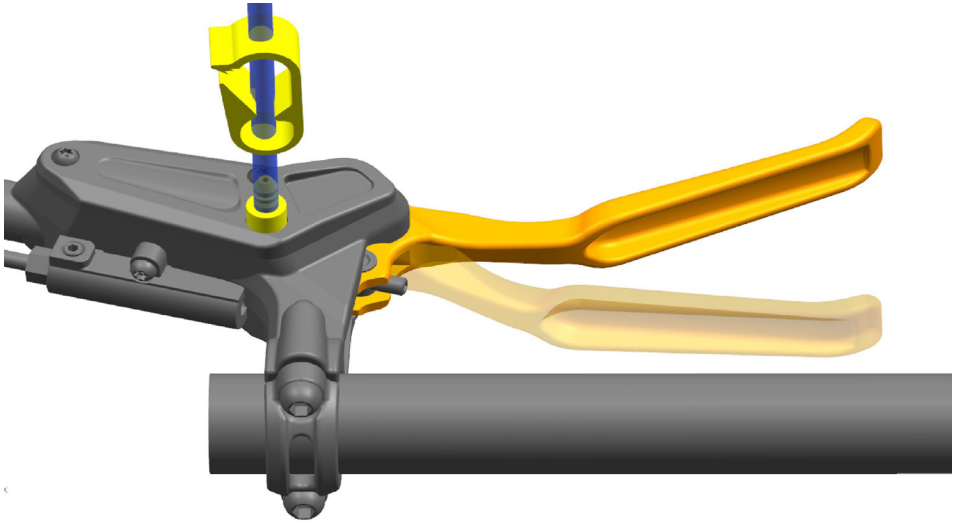

5.6. Close the valve or clamp on the syringe at the brake lever. Remove the syringe at the lever from the leed port. Install the bleed screw. Use a T10 TORX to tighten the bleed screw.

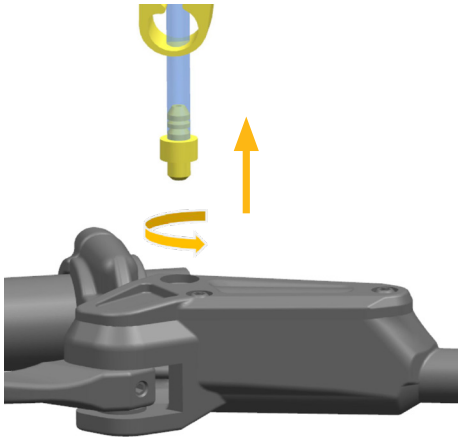

5.7. Clean any mineral brake oil that drips from the bleed port with isopropyl alcohol and a shop towel. Spray isopropyl alcohol on the brake lever and caliper and clean them with a shop towel.

5.8. Install brake pad.

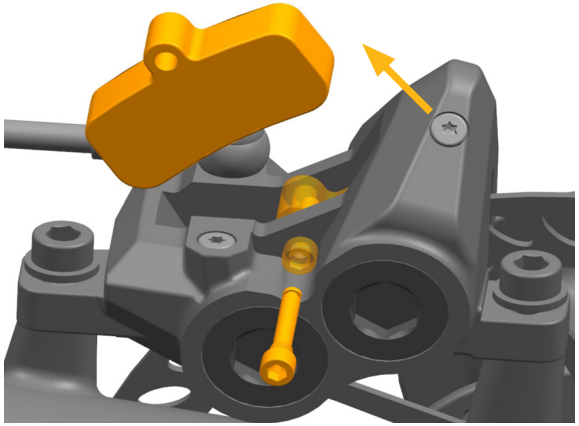

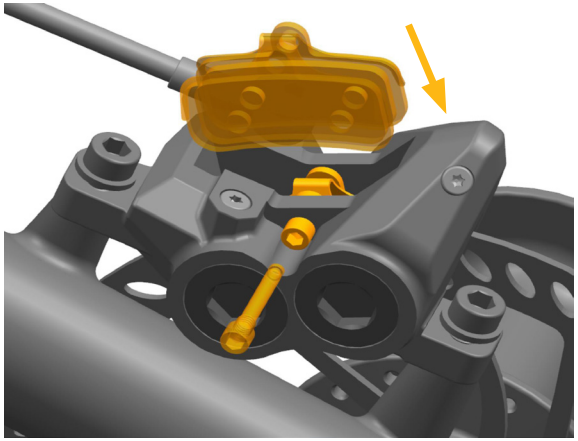

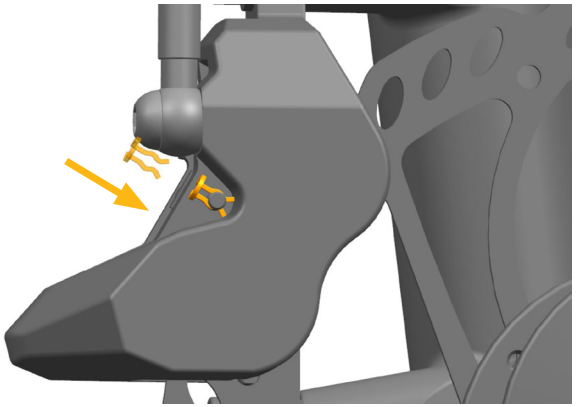

DISC BED-IN PROCEDURE

All new disc brake pads and rotors should be put through a wear-in process called 'bed-in'. The bed-in procedure, which should be performed prior to your first ride, ensures the most consistent and powerful braking feel along with the quietest braking in most riding conditions. The bed-in process heats up the brake pads and rotors, which deposits an even layer of brake pad material (transfer layer) to the braking surface of the rotor. This transfer layer optimizes braking performance.

The bed-in process requires you to perform heavy braking. You must be familiar with the power and operation of disc brakes. Braking heavily when not familiar with the power and operation of disc brakes could cause you to crash, which could lead to serious injury and/or death. If you are unfamiliar with the power and operation of disc brakes, you should have the bed-in process performed by a qualified bicycle mechanic.

To safely achieve optimal results, remain seated on the bike during the entire bed-in procedure. Do not lock up the wheels at any point during the bed-in procedure.

1. Accelerate the bike to a moderate speed, then firmly apply the brakes until you are at walking speed. Repeat approximately twenty times.

2. Accelerate the bike to a faster speed, then very firmly apply the brakes until you are at walking speed. Repeat approximately ten times.

3. Allow the brakes to cool prior to any additional riding.

4. After bed-in the caliper may need to be re- centered. Consult the Caliper Centering and Torque Section.

POWER-OFF SWITCH ADJUSTMENT

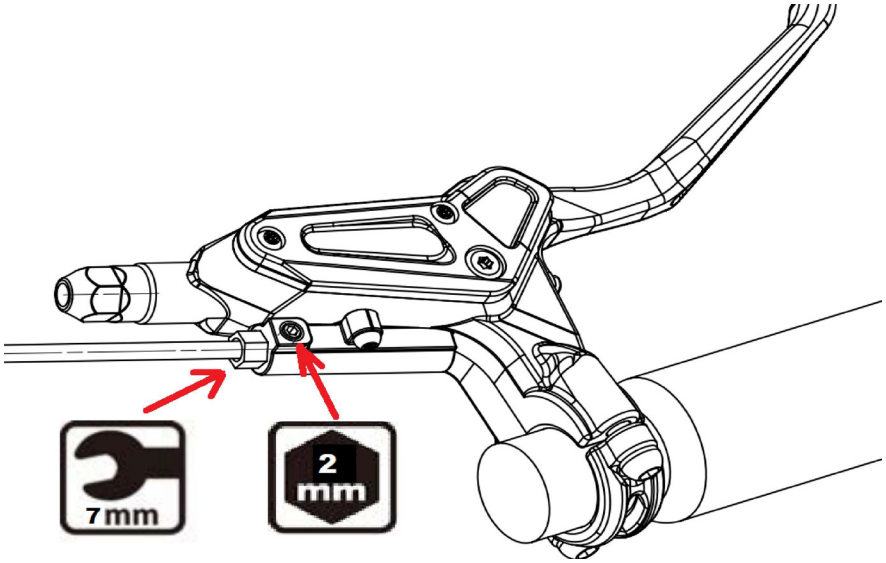

Use 2mm Allen key release the M4 lock screw, rotate the adjust bolt clockwise or counterclock wise with 7mm spanner until the power off switch can work properly when press lever blade for 10~15mm. Tighten the M4 lock screw with 1.5Nm torque.

MAINTENANCE

We recommends to bleed your mineral oil brakes every other year to remove accumulated air. Bleed your brakes more often if you ride fequently, ride on aggressive terrain that requires heavy braking, and/or in sub-freezing temperatures.
Routinely check the rotor bolts, clamp bolts, and caliper bolts for the correct torque values; never ride with loose bolts. Inspect disc brake pads for wear every month. When the thickness of the backing plate and pad material is 3 mm or less, they are worn and need to be replaced with

SERVICE PARTS

		karasawa	Tektro	SRAM	Shimano
Needle		10-40-00053-000		11. 5311. 556. 000	SMALL PARTS FOR SM-BH90, OLIVE & CONNECTER INSERT EACH 1PCS(Y8JA98020)
Compression Bushing		10-40-00052-000		11. 5311. 555. 000	
Brake pads	2piston	10-40-00051-000 (HDM-1/3)	E10. 11		B01S/B05S
	4piston	90-52-00012-000 (HDM-5/5E、HDC-5/5E)	Q11TS		D03S
	2piston (For road bikes)	90-52-00007-000 (HDR-1/3)	F10BS		K04S