ReMote Pro
22.mm HandleBar Clamp

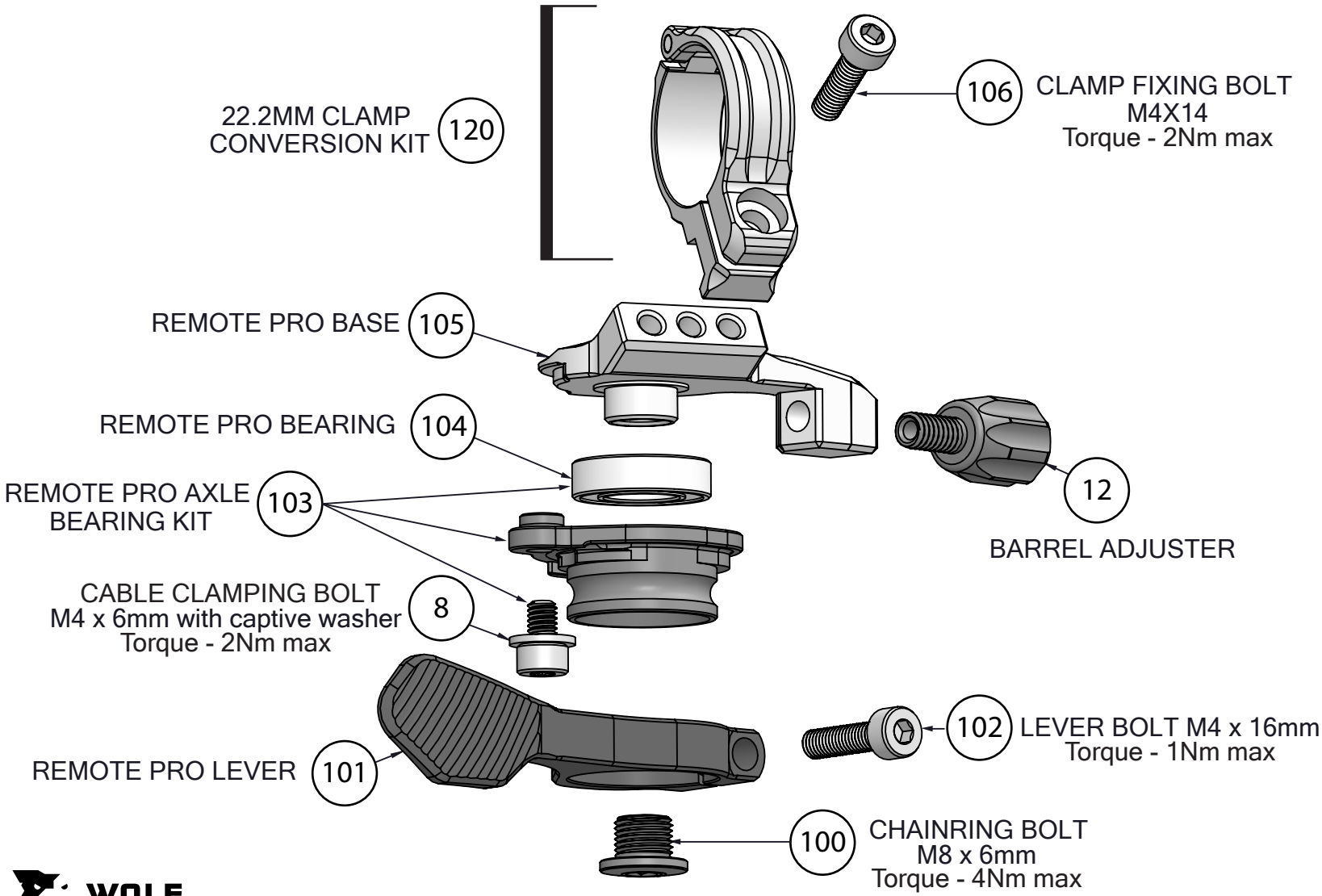

WOLF TOOTH

© 2023 Wolf Tooth. All rights reserved.
US Patent 10473143