WORX RACING TRIM EXTENSION

PART # - WR6021

MODELS: YAMAHA Waverunners with RiDE System

INSTALLATION INSTRUCTIONS

Parts Supplied: 1 x WR06021
1 x M6 x 20 counter bolt
1 x M6 nyloc nut

IMPORTANT: READ ALL INSTRUCTIONS BEFORE PROCEEDING WITH INSTALLATION

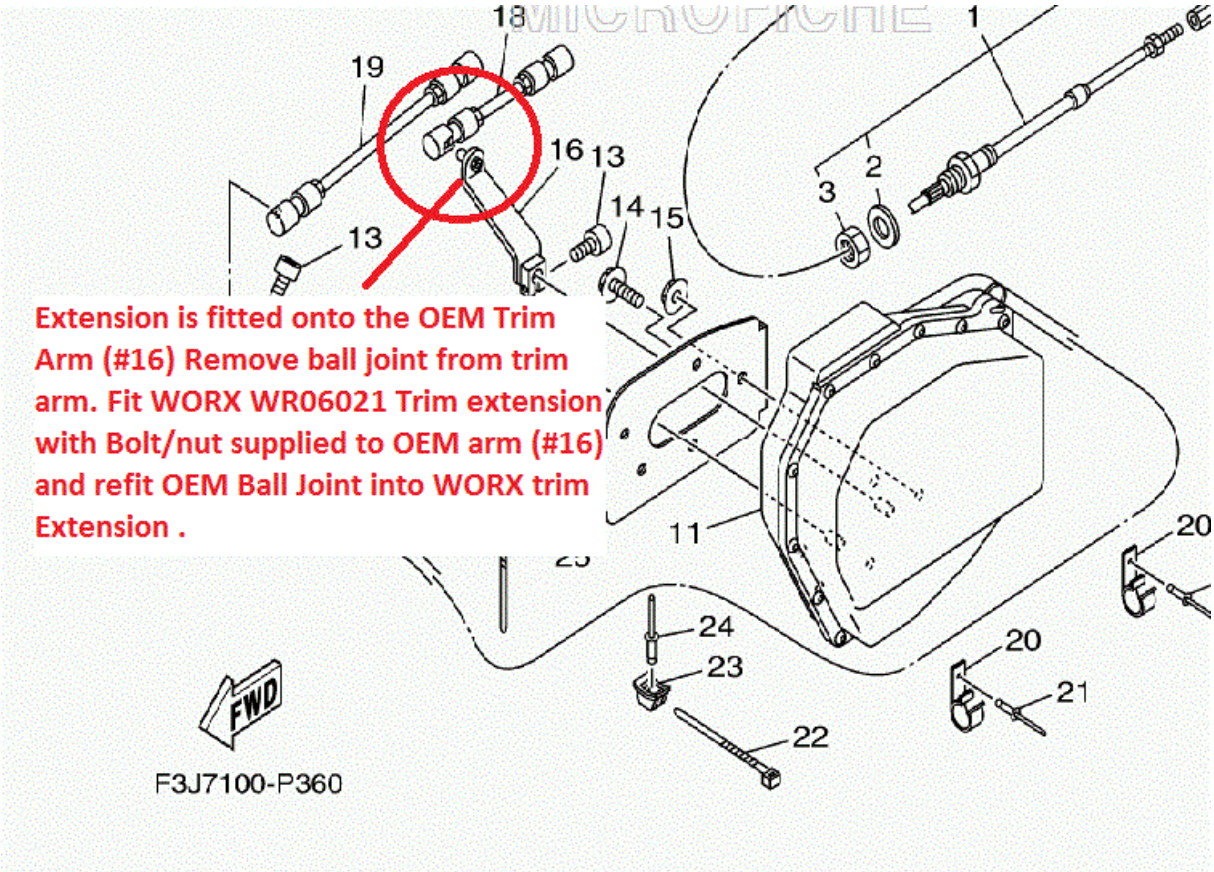

Thank you for purchasing **Worx Racing components** products. We firmly believe that **Worx Racing Components** products are among the finest watercraft parts available. A great deal of time and effort has gone into the design and development of this product to ensure that it will perform to the highest standard and that installation is a relatively straight forward and simple procedure. If you have any questions or comments on the performance and/or installation of our products please contact us at the numbers listed on page one or through your local **Worx** dealer.

8B 354 Brisbane Rd Arundel QLD 4214 Phone: +61 7 5563 1031
www.worx.com.au / info@worx.com.au