# 3mx3m

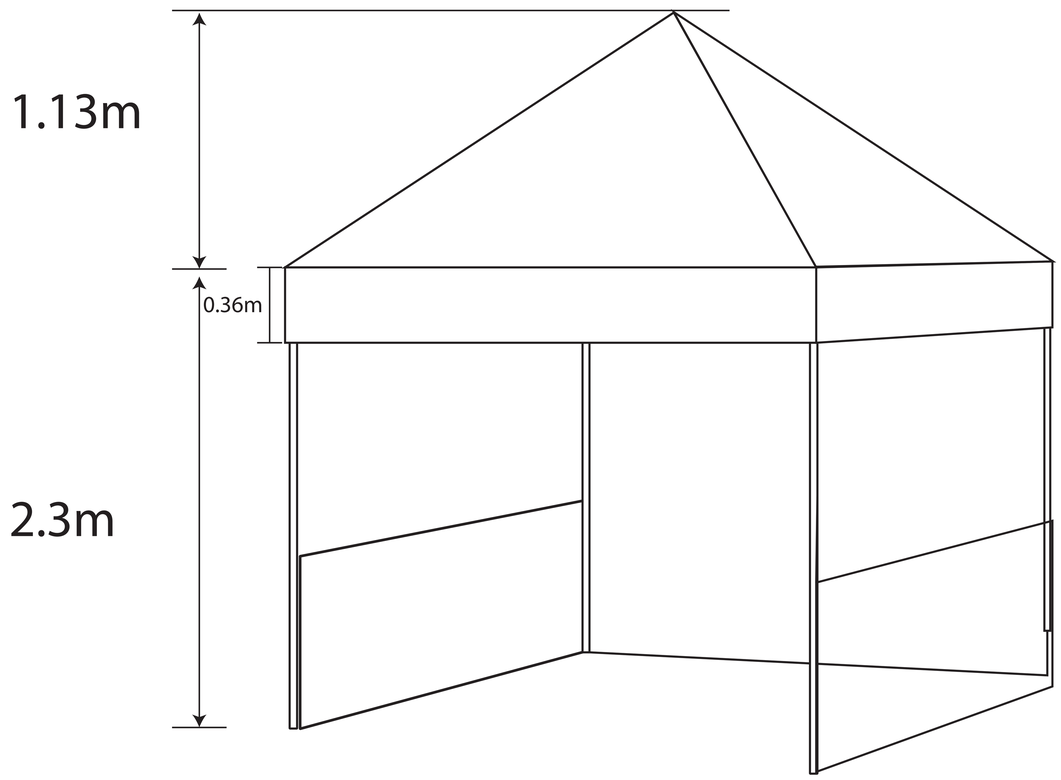


## Canopy top

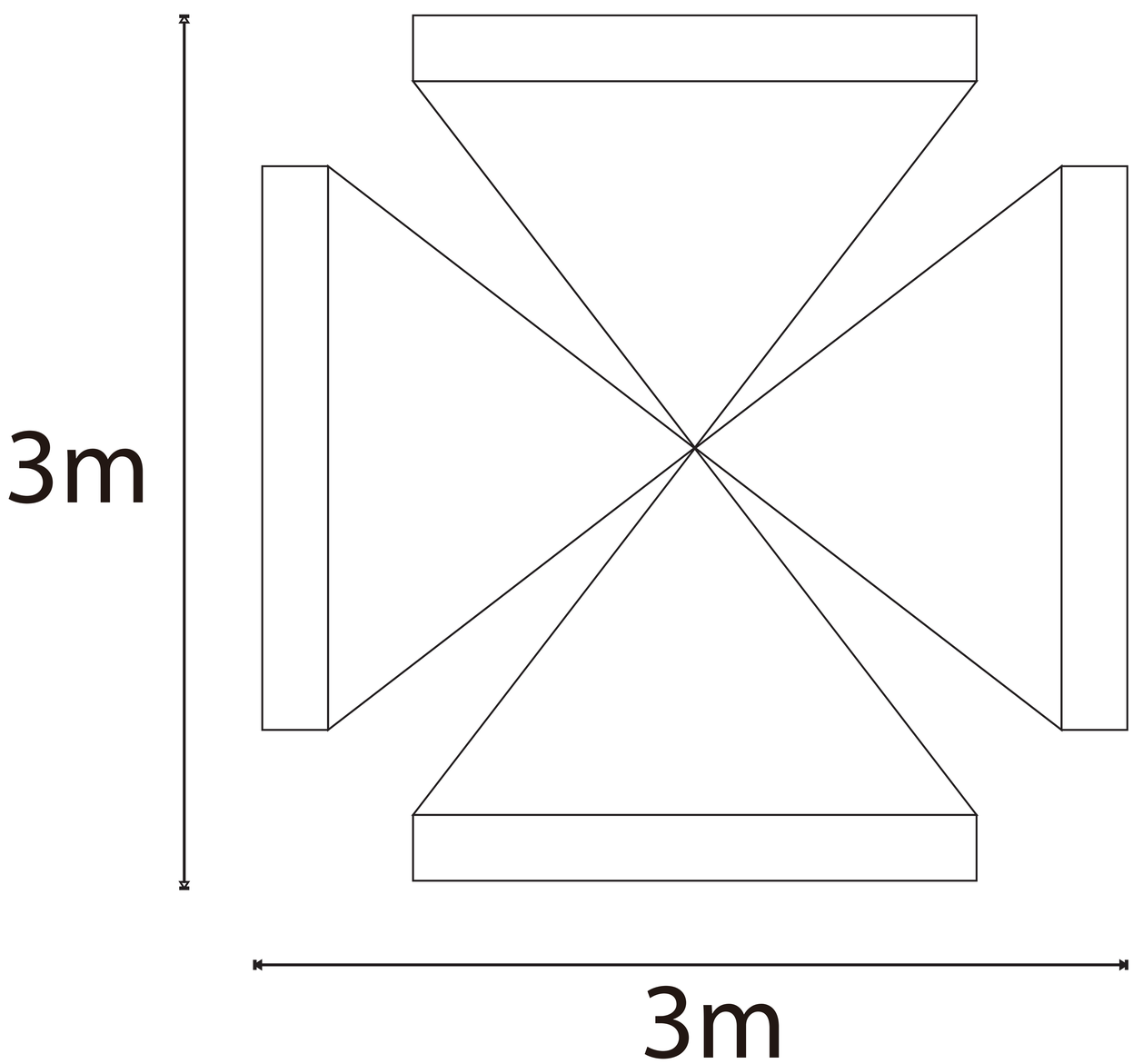


Valance

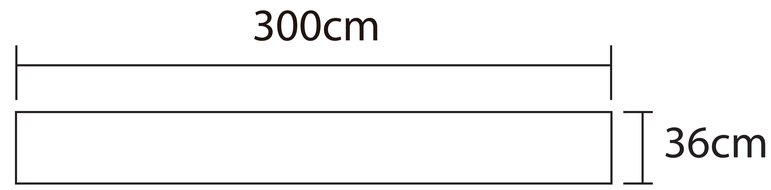


Half side wall-right

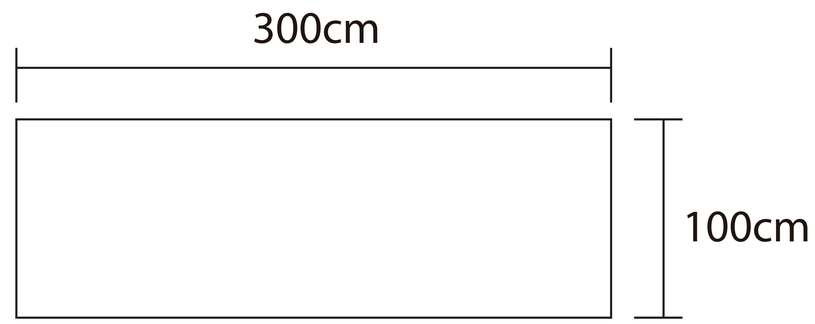


Half side wall-left

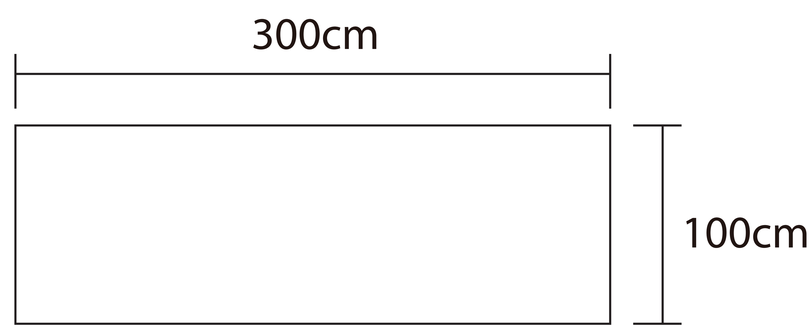

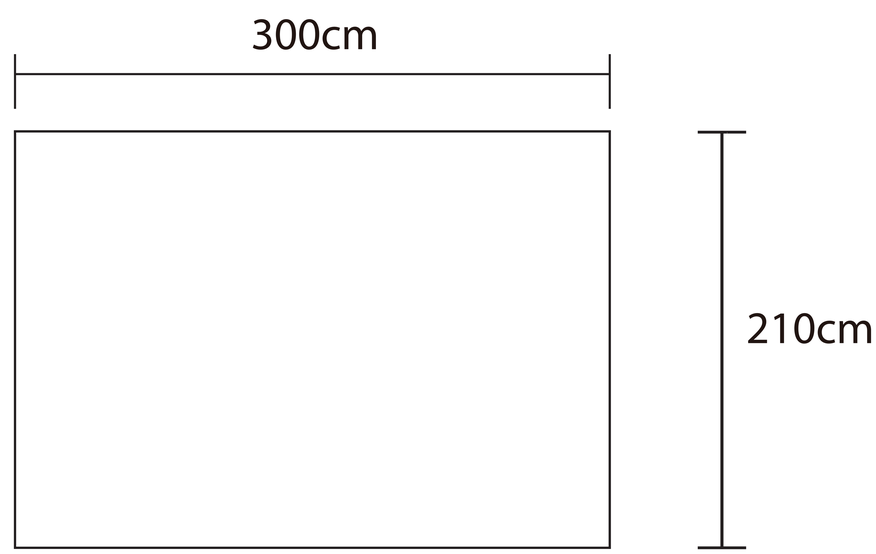
Full back wall