3mx3m

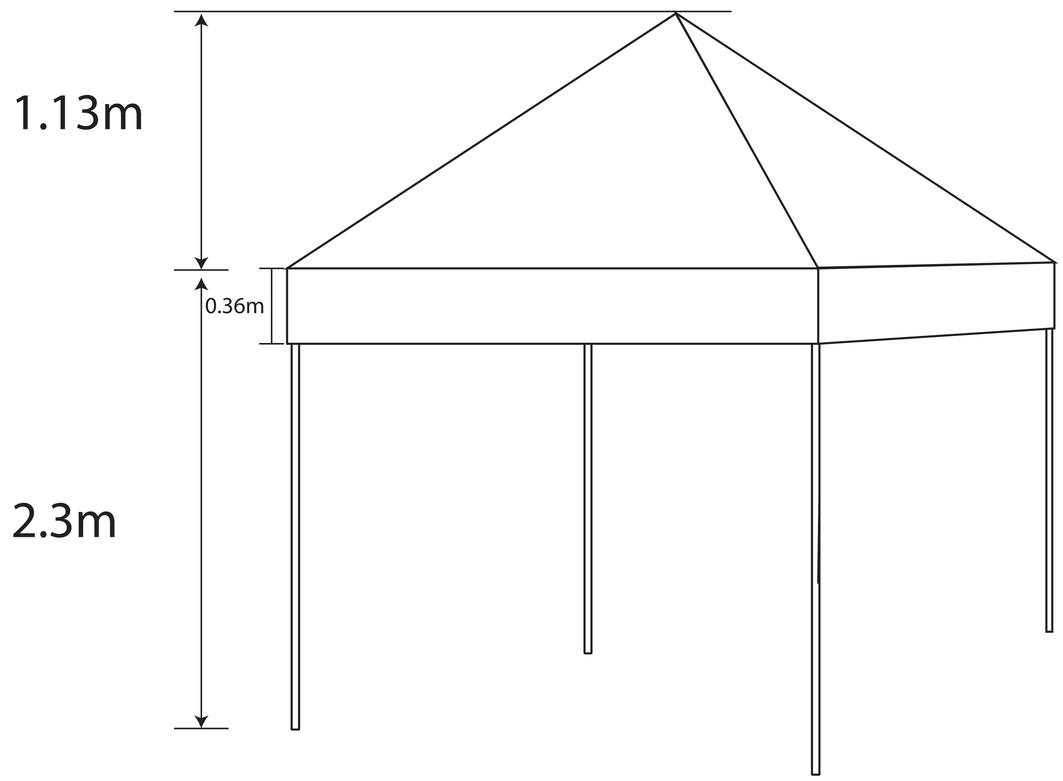
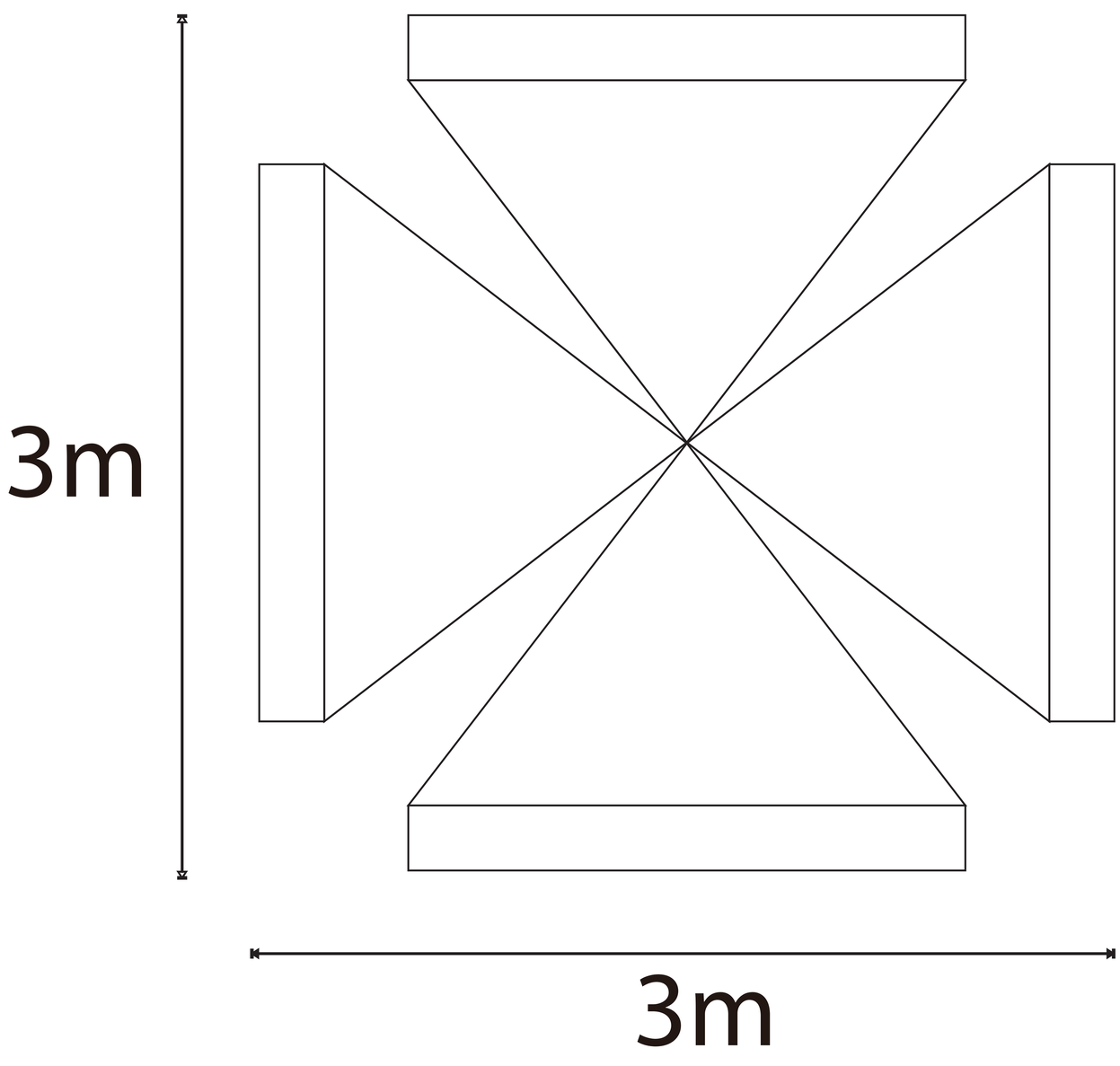
Canopy top