Baridi Compact Tabletop Dishwasher
8 Place Settings, 6 Programmes

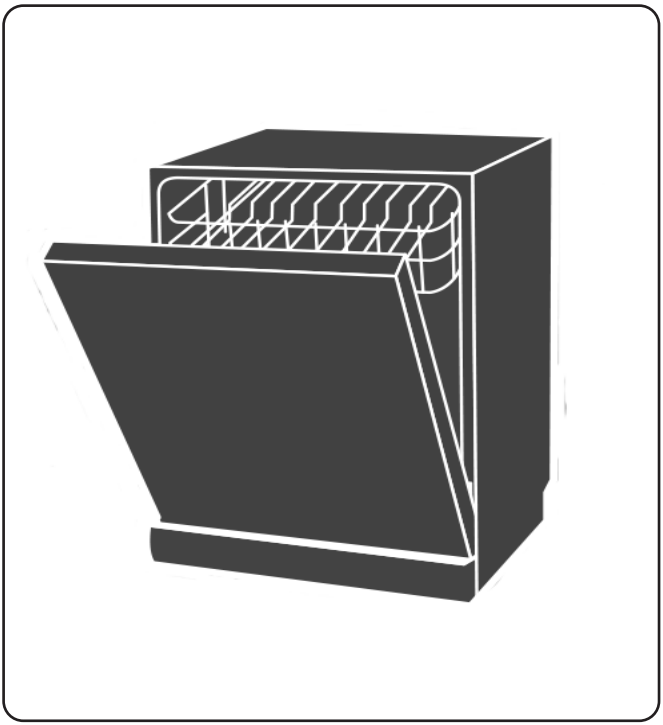

Model No: DH86, DH87, DH88

Thank you for purchasing a Baridi product from the Dellonda range. Manufactured to a high standard, this product will, if used according to these instructions, and properly maintained, give you years of trouble free performance.

DH86, DH87, DH88 Issue 1 20/10/2021

CONTENTS

- General safety 3
- Electrical safety 4
- Introduction 4
- Specification 5

- **General Information**
- Product Overview 6
- Using the dishwasher 7
- Maintenance and cleaning 9
- External care 9
- Internal care 9
- Caring for the dishwasher 12

- **Installation instructions** 13
- Water supply and drain 14
- Connection of drain hoses 15
- Positioning the appliance 16

- **Product Information**
- Quick user guide 17

- Using your dishwasher 18
- Preparing and loading dishes 20

- Loading the baskets (EN60436) 23
- Cutlery rack 24

- Function of the rinse aid and detergent 25
- Filling the rinse aid reservoir 26
- Filling the detergent dispenser 27

- **Programming the dishwasher**
- Wash cycle tables 28
- Saving energy 29
- Starting a program 29
- Changing the program mid cycle 29
- Forgot to add a dish 30

- Error codes 31

- Troubleshooting tips 32

- Technical information 35
- Product information sheet 36

Important Information

Please read these instructions carefully and note any safe operational requirements, warnings & cautions. Use the product correctly and with care for the purpose for which it is intended. Failure to do so may cause damage and/or personal injury and will invalidate the warranty. Keep these instructions safe for future use.

Refer to instructions

Indoor use only

- **GENERAL SAFETY**
- **WARNING!** When using this dishwasher, follow the precautions listed below.
- **WARNING:** Ensure the supply cord is not trapped or damaged.
- **WARNING: DO NOT** locate multiple portable socket-outlets or portable power supplies at the rear of the appliance.
- This appliance is intended to be used in household and similar applications such as staff kitchen areas in shops, offices and other working environments; holiday homes, hotels and other residential settings; and catering and similar non-retail applications.
- This appliance can be used by children aged from 8 years and above and persons with reduced physical, sensory or mental capabilities or lack of knowledge and experience if they have been given supervision or instruction concerning the use of the appliance in a safe way and understand the hazards involved. Children shall not play with the appliance. Cleaning and user maintenance shall not be made by children without supervision (EN60335-1).
- Packaging materials could be dangerous for children.
- **DO NOT** abuse, sit on or stand on the door or dish rack of the dishwasher
- **DO NOT** operate this dishwasher unless the unit is fully assembled and all enclosures panels are fully in place.
- **DO NOT** open the door whilst the dishwasher is switched on and operating, you are at risk of scalding from hot water and steam.
- When loading items to be washed locate sharp items so that are unlikely to damage the door seals, also knives and other utensils with sharp points must be loaded in the cutlery basket with their points facing down or placed horizontally on a shelf.
- Some dishwasher detergents have strong alkalinity, they are extremely dangerous if ingested, avoid contact with skin and eyes and keep children away from the dishwasher when the door is open.
- Always check there is no detergent residue left after the completion of a wash cycle.
- **DO NOT** wash plastic items unless they are marked dishwasher safe.
- Use only detergents and rinse agents that are recommended for use with automatic dishwashers .
- Never use soap, laundry detergent, or hand washing detergents in this dishwasher.
- **DO NOT** leave the door of this dishwasher open when the appliance is not in use.
- **DO NOT** tamper with the appliance or controls.
- If the appliance is moved it is recommend it is installed with new hose sets and **NOT** reused ones
- In Stand by mode the appliance will switch off automatically after 15 minutes without any user interaction
- The maximum number of place settings to be washed is 8

• ELECTRICAL SAFETY

- **WARNING!** It is the user's responsibility to check the following:
- Check all electrical equipment and appliances to ensure that they are safe before using. Inspect power supply leads, plugs and all electrical connections for wear and damage. Dellonda recommend that an (Residual Current Device) is used with all electrical products. You may obtain an RCD by contacting your local domestic stockist. If the product is used in the course of business duties, it must be maintained in a safe condition and routinely PAT (Portable Appliance Test) tested.
- **Electrical safety information:** It is important that the following information is read and understood.
- Ensure that the insulation on all cables and on the appliance is safe before connecting it to the power supply
- Regularly inspect power supply cables and plugs for wear or damage and check all connections to ensure that they are secure.
- **Important:** Ensure that the voltage rating on the appliance suits the power supply to be used and that the plug is fitted with the correct fuse - see fuse rating in these instructions.
- **DO NOT** pull or carry the appliance by the power cable.
- **DO NOT** pull the plug from the socket by the cable.
- **DO NOT** use worn or damaged cables, plugs or connectors.
- Ensure that any faulty item is repaired or replaced immediately by a qualified electrician.
- This product is fitted with a BS1363/A 13 Amp
- 3 pin plug. If the cable or plug is damaged during use, switch off the electricity supply and remove from use.
- Ensure that repairs are carried out by a qualified electrician.
- Replace a damaged plug with a BS1363/A 13 amp 3 pin plug.
- If in doubt contact a qualified electrician.
- Ensure that the cable outer sheath extends inside the cable restraint and that the restraint is tight.
- Dellonda recommend that repairs are carried out by a qualified electrician.

A) Connect the GREEN/YELLOW earth wire to the earth terminal 'E'.
B) Connect the BROWN live wire to the live terminal 'L'.
C) Connect the BLUE neutral wire to the neutral terminal 'N

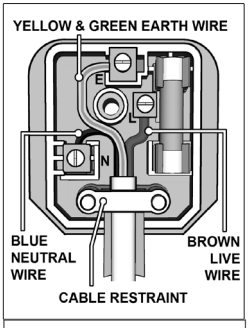

Replacement fuse rating:
13A

INTRODUCTION

- Compact design ideal for homes with limited kitchen space! The dishwasher connects the same as any normal dishwasher. It can however be connected to a kitchen tap for temporary use by unscrewing the aerator and fitting an adaptor which can be easily purchased from most hardware stores. The waste pipe can be plumbed in or just directed toward the plug drain. Attractive, modern design makes it suitable to be used as a countertop dishwasher but the compact size gives the option to be installed or freestanding in a cupboard space. Delayed start options of 2, 4, 6 or 8 hours so dishwasher can come on during the night on cheaper energy rates or be set to wash whilst you are out. 6 wash programmes; Intensive, Normal, Eco, Glass, 90 minutes & Rapid Clean. Uses less water than washing up at only 8L/cycle! Energy Class F.

- **SPECIFICATION**
- **Model no: DH86, DH87, DH88**
- Dimensions (W x D x H): ..... 500 x 500 x 595mm
- Place settings: 8
- Water usage: 8L
- Water Pressure: 0.04-1.0MPa
- Power rating: 1500W
- Voltage/frequency: 230V/50Hz
- IP Rating: IPX1
- Energy efficiency Class: ..... F
- Noise level: 49dB
- Energy Consumption: 0.72kWh/cycle

PRODUCT OVERVIEW

❗ IMPORTANT:

To get the best performance from your dishwasher, read all operating instructions before using it for the first time.

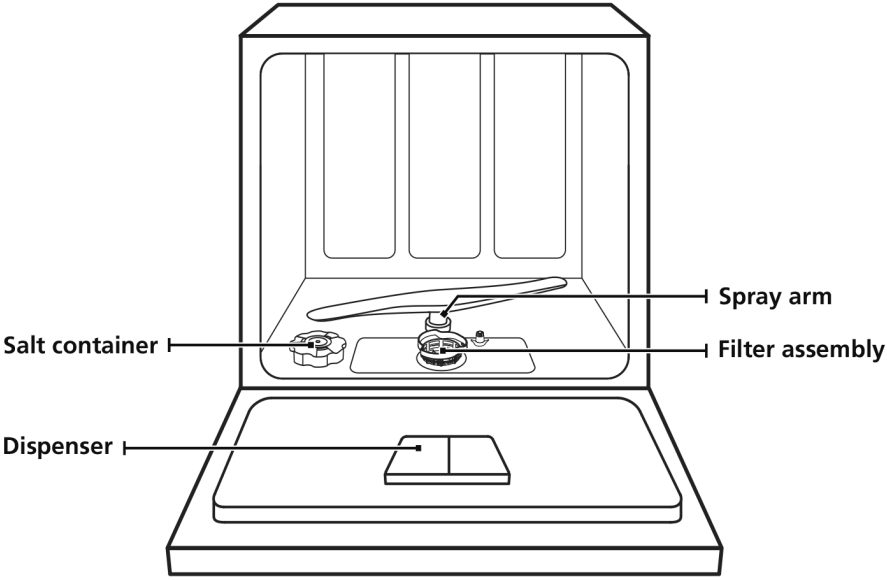

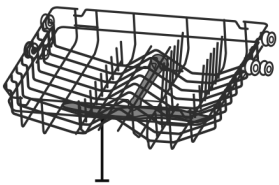

Upper basket

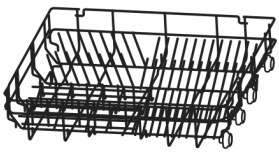

Lower basket

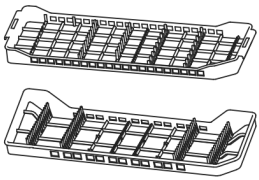

Cutlery rack

💡 NOTE:

Pictures are only for reference, different models may vary in layout.

USING YOUR DISHWASHER

Before using your dishwasher :

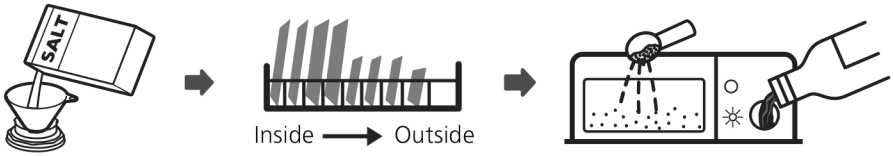

1. Set the water softener
2. Load the salt Into the softener
3. Load the basket
4. Fill the detergent dispenser

Please check the section "Water Softener"

Loading The Salt Into The Softener

NOTE:

If your model does not have any water softener, you may skip this section.

Always use salt intended for dishwasher use.

The salt container is located beneath the lower basket and should be filled as explained in the following:

⚠ WARNING

- **Only use salt specifically designed for dishwashers use!**
  Every other type of salt not specifically designed for dishwasher use, especially table salt, will damage the water softener. In case of damages caused by the use of unsuitable salt the manufacturer does not give any warranty nor is liable for any damages caused.
- **Only fill with salt before running a cycle.**
  This will prevent any grains of salt or salty water, which may have been spilled, remaining on the bottom of the machine for any period of time, which may cause corrosion.

Please follow the steps below for adding dishwasher salt:

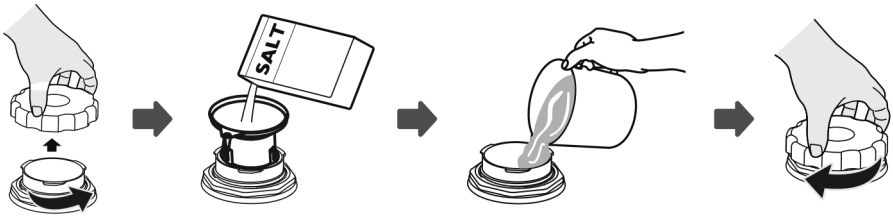

1. Remove the lower basket and unscrew the reservoir cap.
2. Place the end of the funnel (if supplied) into the hole and pour in about 650g of dishwasher salt.
3. Fill the salt container to its maximum limit with water, It is normal for a small amount of water to come out of the salt container.
4. After filling the container, screw back the cap tightly.
5. The salt warning light will turn off after the salt container has been filled with salt.
6. Immediately after filling the salt into the salt container, a washing program should be started (We suggest to use a short program). Otherwise the filter system, pump or other important parts of the machine may be damaged by salty water. This is out of warranty.

NOTE:

- The salt container must only be refilled when the salt warning light ( ) in the control panel comes on. Depending on how well the salt dissolves, the salt warning light may still be on even though the salt container is filled.
  If there is no salt warning light in the control panel (for some models), you can estimate when to fill the salt into the softener by the cycles that the dishwasher has run.
- If salt has spilled, run a soak or quick program to remove it.

MAINTENANCE AND CLEANING

External Care

The door and door seal

Clean the door seals regularly with a soft damp cloth to remove food deposits. When the dishwasher is being loaded, food and drink residues may drip onto the sides of the dishwasher door. These surfaces are outside the wash cabinet and are not accessed by water from the spray arms. Any deposits should be wiped off before the door is closed.

The control panel

The control panel should be wiped with a soft damp cloth only.

⚠ WARNING

- To avoid penetration of water into the door lock and electrical components, do not use a spray cleaner of any kind.
- Never use abrasive cleaners or scouring pads on the outer surfaces because they may scratch the finish. Some paper towels may also scratch or leave marks on the surface.

Internal Care

Filtering system

The filtering system in the base of the wash cabinet stops coarse debris from entering the washing system. The collected coarse debris may cause the filters to clog. Check the condition of the filters regularly, carefully remove foreign objects and clean the parts of the filtering system if necessary with water. Follow the steps below to clean the filter.

NOTE:

Pictures are only for reference, different models of the filtering system and spray arms may be different.

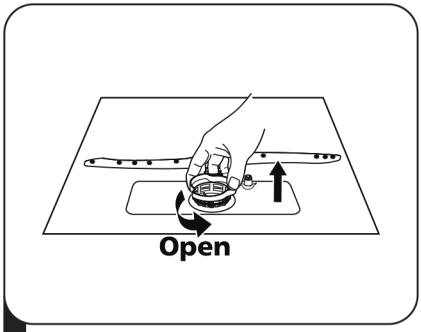

1 Hold the coarse filter and rotate it anticlockwise to unlock the filter. Lift the filter upwards and out of the dishwasher.

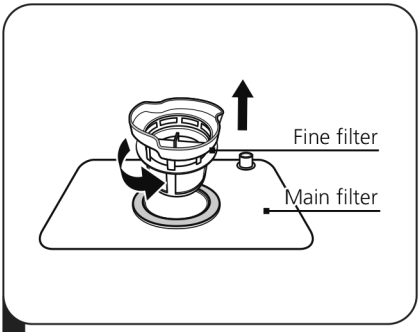

2 Lift fine filter up from main filter.

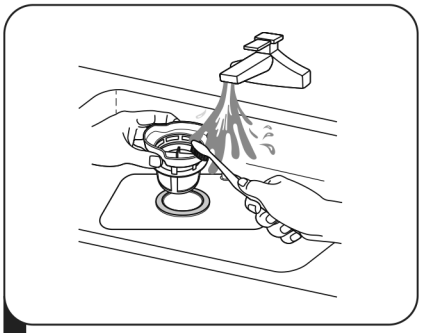

3 Larger food remnants can be cleaned by rinsing the filter under running water.
For a more thorough clean, use a soft cleaning brush.

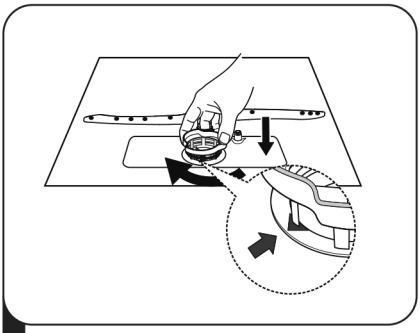

4 Reassemble the filters in the reverse order of the disassembly, replace the filter insert, and rotate clockwise to the close arrow.

⚠ WARNING

- Do not over tighten the filters. Put the filters back in sequence securely, otherwise coarse debris could get into the system and cause a blockage.
- NEVER use the dishwasher without filters in place. Improper replacement of the filter may reduce the performance level of the appliance and damage dishes and utensils.

Spray arms

It is necessary to clean the spray arms regularly for hard water chemicals will clog the spray arm jets and bearings.

To clean the spray arms, follow the instructions below:

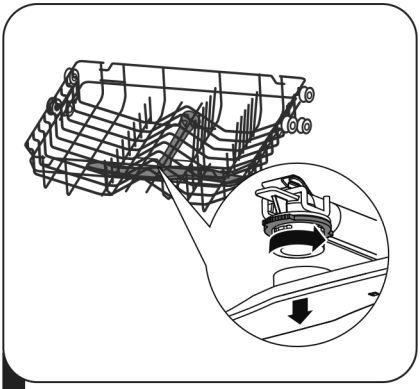

1 To remove the upper spray arm, hold the nut in the center still and rotate the spray arm counterclockwise to remove it.

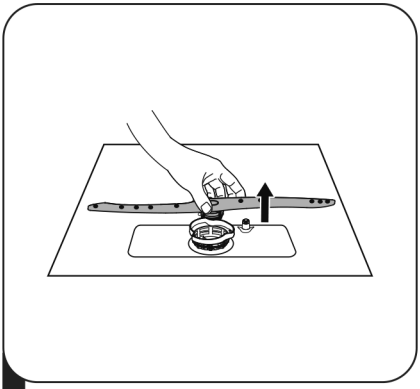

2 To remove the lower spray arm, pull out the spray arm upward.

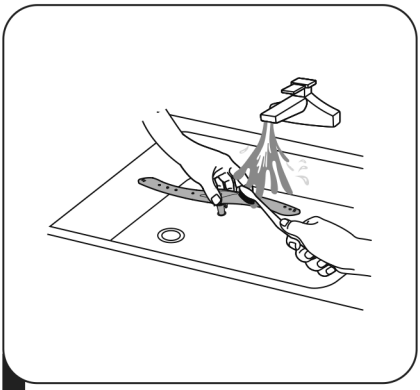

3 Wash the arms in soapy and warm water and use a soft brush to clean the jets. Replace them after rinsing them thoroughly.

Caring For The Dishwasher

Frost precautions

Please take frost precaution measures with the dishwasher in cold weather. After each wash cycle, please try to do the following:

1. Cut off the electrical power to the dishwasher at the supply source.
2. Turn off the water supply and disconnect the water inlet pipe from the water valve.
3. Drain the water from the inlet pipe and water valve. (Use a pan to gather the water)
4. Reconnect the water inlet pipe to the water valve.
5. Remove the filter at the bottom of the tub and use a sponge to soak up water in the sump.

After every wash

After every wash, turn off the water supply to the appliance and leave the door slightly open for a while so that moisture and odours are not trapped inside.

Remove the plug

Before cleaning or performing maintenance, always remove the plug from the socket.

No solvents or abrasive cleaning

To clean the exterior and rubber parts of the dishwasher, do not use solvents or abrasive cleaning products. Only use a cloth with warm soapy water.
To remove spots or stains from the surface of the interior, use a cloth dampened with water an a little vinegar, or a cleaning product made specifically for dishwashers.

When not in use for long periods

It is recommend that you run a wash cycle with the dishwasher empty and then remove the plug from the socket, turn off the water supply and leave the door of the appliance slightly open. This will help the door seals to last longer and prevent odours from forming within the appliance.

Moving the appliance

If the appliance must be moved, try to keep it in the vertical position. If absolutely necessary, it can be positioned on its back.

Seals

One of the factors that cause odours to form in the dishwasher is food that remains trapped in the seals. Periodic cleaning with a damp sponge will prevent this from occurring.

INSTALLATION INSTRUCTION

⚠WARNING

Electrical Shock Hazard
Disconnect electrical power before installing dishwasher.
Failure to do so could result in death or electrical shock.

⚠ Attention

The installation of pipes and electrical equipment should be done by professionals.

About Power Connection

⚠WARNING

For personal safety:

- Do not use an extension cord or an adapter plug with this appliance.
- Do not, under any circumstances, cut or remove the earthing connection from the power cord.

Electrical requirements

Check the rating label to ensure the rated voltage and connect the dishwasher to the appropriate power supply. Use the required fuse (13amp), it is recommended that an RCD is used with this appliance.

Electrical connection

Ensure the voltage and frequency of the power supply corresponds to those on the rating label. Only insert the plug into an electrical socket which is earthed properly. If the electrical socket to which the appliance is connected to is not appropriate for the plug, replace the socket, rather than using adaptors or the like as they could cause overheating and burns.

⚠ Ensure that proper earthing exists before use

Water Supply And Drain

Cold water connection

Connect the cold water supply hose to a threaded 3/4 (inch) connector and make sure that it is fastened tightly in place.
If the water pipes are new or have not been used for an extended period of time, let the water run to make sure that the water is clear. This precaution is needed to avoid the risk of the water inlet being blocked and damaging the appliance.

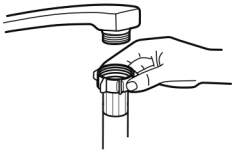

ordinary supply hose

safety supply hose

About the safety supply hose

The safety supply hose has double walls. This system helps ensure the pipe does not leak in the case of the inner supply hose failing when the air space between the supply hose itself and the outer corrugated hose is full of water.

⚠WARNING

A hose that attaches to a tap can burst if it is installed on the same water line as the dishwasher. If your sink has one, it is recommended that the hose be disconnected and the hole plugged.

How to connect the safety supply hose

1. Pull the safety supply hoses out from storage compartment located at the rear of the dishwasher.
2. Tighten the fitting on the safety supply hose to the tap connection.
3. Turn the water fully on before starting the dishwasher

How to disconnect the safety supply hose

1. Turn off the water.
2. Unscrew the safety supply hose from the tap.

Connection Of Drain Hoses

Insert the drain hose into a drain pipe with a minimum diameter of 4 cm, or let it run into the sink, make sure not to bend or crimp it. The height of drain pipe must be less than 750 mm. The free end of the hose must not be allowed to sit in water as it could flow back up the waste pipe.

⚠ Please securely fix the drain hose in either position A or position B

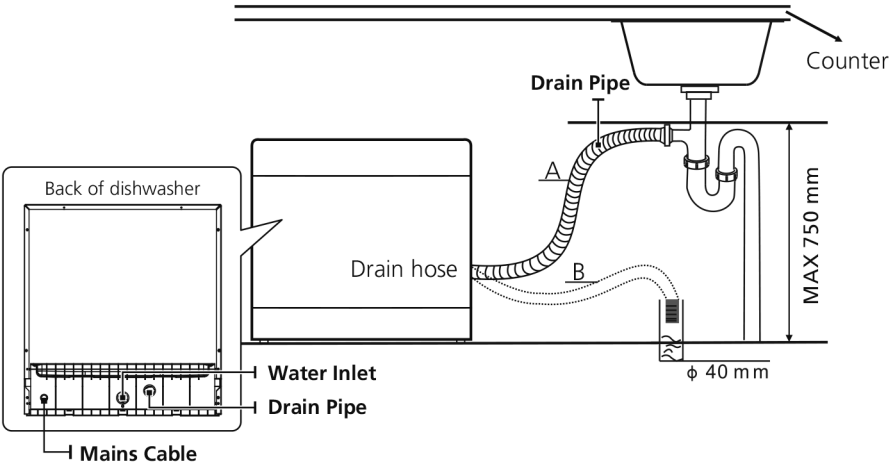

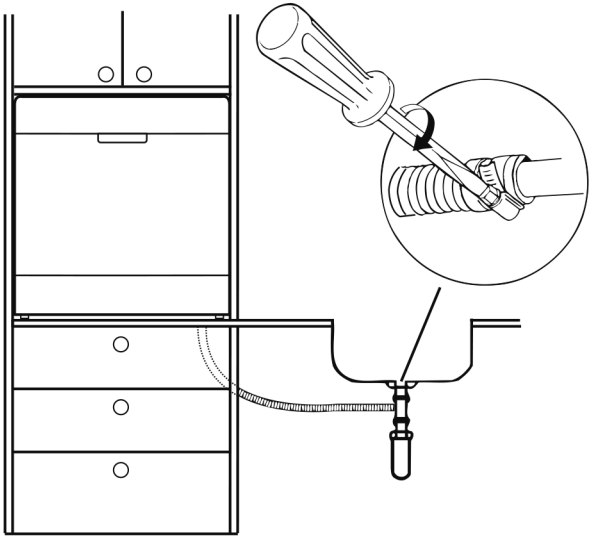

How to drain excess water from hoses

If the connection to the drain pipe is positioned higher than 750 mm, excess water may remain in the drain hose. It will be necessary to drain excess water from the hose into a bowl or suitable container that is held outside and lower than the sink.

Water outlet

Connect the water drain hose. The drain hose must be correctly fitted to avoid water leaks. Ensure that the water drain hose is not kinked or squashed.

Extension hose

If you need a drain hose extension, make sure to use a similar hose style.
It must be no longer than 4 metres; otherwise the cleaning effect of the dishwasher could be reduced.

Syphon connection

The waste pipe connection must not exceed 750 mm in height from the base of the dishwasher.

Positioning The Appliance

Position the appliance in the desired location. The back should rest against the wall behind it, and the sides, along the adjacent cabinets or walls. The dishwasher is equipped with water supply and drain hoses that can be positioned either to the right or the left sides to facilitate proper installation. Allways ensure the dishwasher is positioned on a level clear surface.

QUICK USER GUIDE

Please read the corresponding content on the instruction manual for detailed operating method.

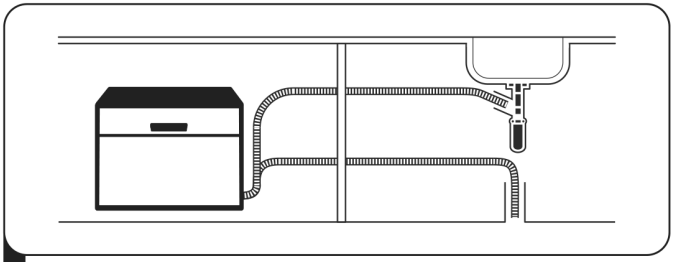

1 Install the dishwasher

Please check the section "INSTALLATION INSTRUCTION "

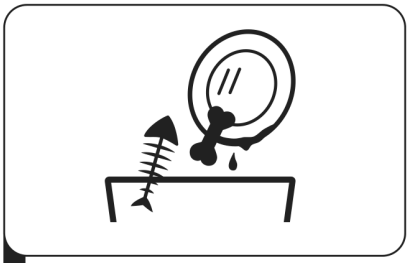

2 Remove larger residue from dishes. Avoid pre-rinsing.

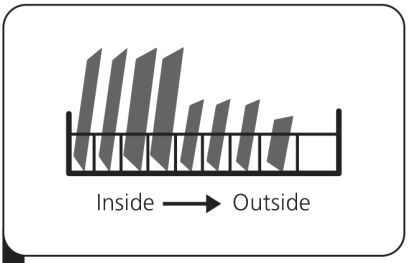

3 Load the baskets

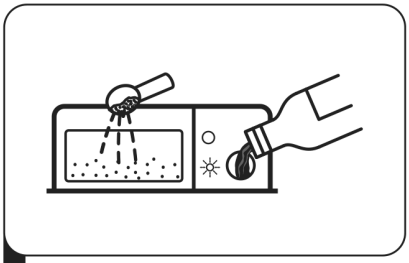

4 Fill the dispenser with detergent and rinse aid.

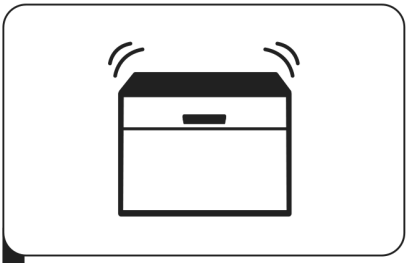

5 Select a suitable programme and start the dishwasher.

USING YOUR DISHWASHER

Control Panel

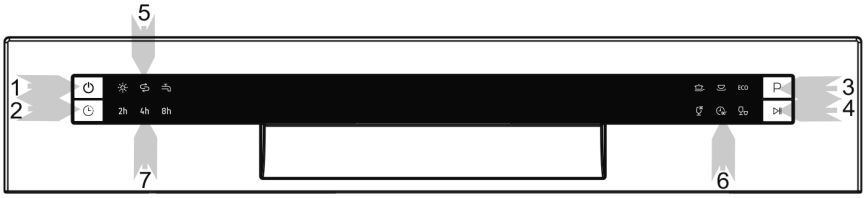

Operation (Button)

1 **Power**	Press this button to turn on your dishwasher
2 **Delay**	Press the button to set the delay time
3 **Program**	Press this button to select the appropriate washing program, the program indicator will be lit.
4 **Start/Pause**	Press the button to start the selected washing program or pause the working program.

Display

5 **Warning indicator**	Rinse Aid If the " " indicator is lit, it means the dishwasher is low on dishwasher rinse aid and requires a refill. Salt If the " " indicator is lit, it means the dishwasher is low on dishwasher salt and needs to be refilled. Water **Tap** If the " " indicator is lit, it means the water tap is closed.

6 Program indicator	Intensive For the heaviest soiled crockery, and normally soiled pots, pans, dishes etc. (dried-on food). Universal For normally soiled loads, such as pots, plates, glasses and lightly soiled pans. ECO This is the standard program, it is suitable to clean normally soiled tableware and it is the most efficient program in terms of its combined energy and water consumption for that type of tableware. Glass For lightly soiled crockery and glass. 90 min For normally soiled loads that need a quick wash. Rapid A shorter wash for lightly soiled loads that do not need drying.
7 Delay time	To show the delay time. (2h/4h/6h/8h)

Preparing And Loading Dishes

- Consider buying utensils which are identified as dishwasher-proof.
- For particular items, select a program with the lowest possible temperature.
- To prevent damage, do not take glass and cutlery out of the dishwasher immediately after the program has ended.

The following cutlery and dishes are not suitable

- Cutlery with wooden, horn china or mother-of-pearl handles
- Plastic items that are not heat resistant
- Older cutlery with glued parts that are not temperature resistant
- Bonded cutlery items or dishes
- Pewter or copper items
- Crystal glassware
- Steel items that will rust
- Wooden platters
- Items made from synthetic fibres

Are of limited suitability

- Some types of glasses can become dull after a large number of washes
- Silver and aluminum parts have a tendency to discolour during washing
- Glazed patterns may fade if machine washed frequently

Recommendations for loading the dishwasher

Scrape off any large amounts of leftover food. Soften remnants of burnt food in pans. It is not necessary to rinse the dishes under running water.

For best performance of the dishwasher, follow these loading guidelines.

(Features and appearance of baskets and cutlery baskets may vary from your model.)

Place objects in the dishwasher in the following way:

- Items such as cups, glasses, pots, pans, etc. must face downwards.
- Curved items, or ones with recesses, should be loaded aslant so that water can run off.
- All utensils are stacked securely and can not tip over.
- All utensils are placed in a way that allows the spray arms to rotate freely during washing.
- Load hollow items such as cups, glasses, pans etc. With the opening facing downwards so that water cannot collect in the container or a deep base.
- Dishes and items of cutlery must not lie inside one another, or cover each other.
- To avoid damage, glasses should not touch one another.
- The upper basket is designed to hold more delicate and lighter dishware such as glasses, coffee and tea cups.
- Long bladed knives stored in an upright position are a potential hazard!
- Long and sharp items of cutlery such as carving knives must be positioned horizontally in the upper basket.
- Please do not overload your dishwasher. This is important for good results and for reasonable consumption of energy.

NOTE:

Very small items should not be washed in the dishwasher as they could easily fall out of the basket.

Removing the dishes

To prevent water dripping from the upper basket into the lower basket, we recommend that you empty the lower basket first, followed by the upper basket.

⚠ WARNING

Items will be hot! To prevent damage, do not take glass and cutlery out of the dishwasher for around 15 minutes after the program has ended.

Loading the upper basket

The upper basket is designed to hold more delicate and lighter dishware such as glasses, coffee and tea cups and saucers, as well as plates, small bowls and shallow pans (as long as they are not too dirty. Position the dishes and cookware so that they will not get moved by the spray of water.

Loading the lower basket

We suggest that you place large and difficult to clean items into the lower basket: such as pots, pans, lids, serving dishes and bowls, as shown in the figure below. It is preferable to place serving dishes and lids on the side of the racks in order to avoid blocking the rotation of the top spray arm.

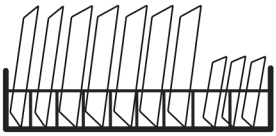

The maximum diameter advised for plates in front of the detergent dispenser is of 19 cm, this is so to not not to hamper the opening of it.

Loading the cutlery basket

Cutlery should be placed in the cutlery basket separate from each other in the appropriate positions. Avoid nesting of the cutlery to prevent insufficient cleaning performance.

⚠ WARNING

Do not let any item extend through the bottom.
Always load sharp utensils with the sharp point down!

LOADING THE BASKETS ACCORDING TO EN60436:

Loading the dishwasher to its full capacity will contribute to energy and water savings.

1.Upper basket:

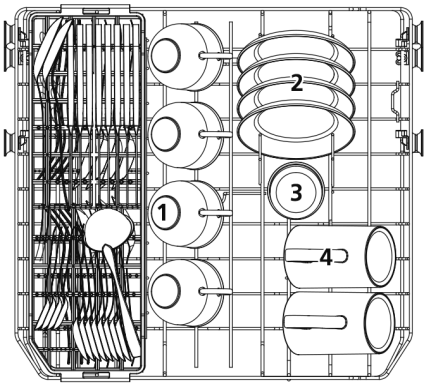

Number	Item
1	Cups
2	Saucers
3	Glasses
4	Mugs

2.Lower basket:

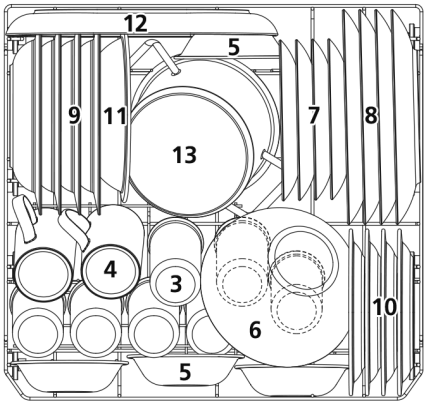

Number	Item
5	Dessert bowls
6	Glass bowl
7	Dessert plates
8	Dinner plates
9	Soup plates
10	Melamine dessert plates
11	Melamine bowl
12	Oval platter
13	Small pot

3.Cutlery rack:

Up rack

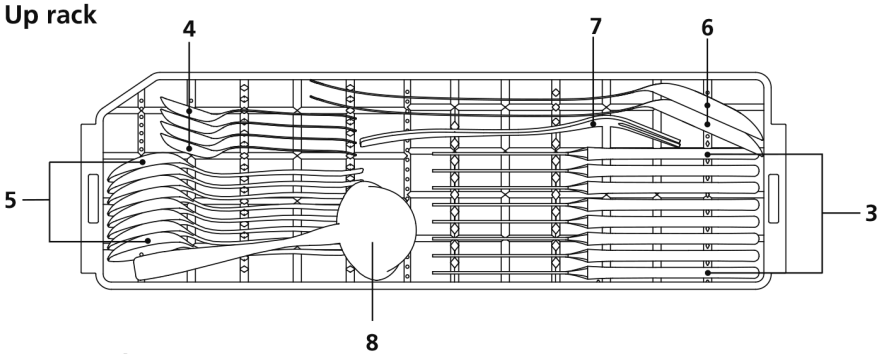

Down rack

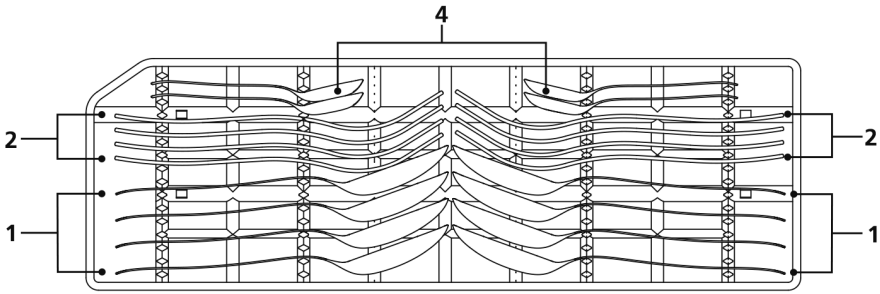

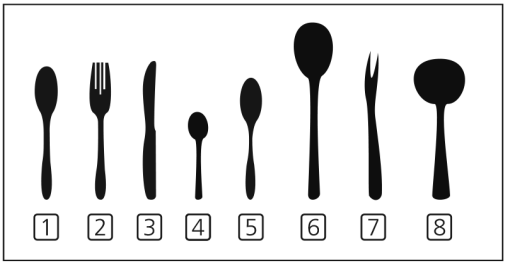

Number	Item
1	Soup spoons
2	Forks
3	Knives
4	Teaspoons
5	Dessert spoons
6	Serving spoons
7	Serving forks
8	Gravy ladle

Information for comparability
tests in accordance with EN60436
Capacity: 8 place settings
Position of the upper basket: lower position
Program: ECO
Rinse aid setting: 6

Function Of The Rinse Aid And Detergent

The rinse aid is released during the final rinse to prevent water from forming droplets on your dishes, which can leave spots and streaks. It also improves drying by allowing water to run off the dishes. Your dishwasher is designed to use liquid rinse aids.

⚠ WARNING

Only use branded rinse aid for dishwasher. Never fill the rinse aid dispenser with any other substances (e.g. Dishwasher cleaning agent, liquid detergent). This will damage the appliance.

When to refill the rinse aid dispenser

Unless the rinse-aid warning light ( ) on the control panel is on, you can always estimate the amount from the colour of the optical level indicator located next to the cap. When the rinse-aid container is full, the indicator will be fully dark. The size of the dark dot decreases as the rinse-aid diminishes. You should never let the rinse aid level be less than 1/4 full.

As the rinse aid diminishes, the size of the black dot on the rinse aid level indicator changes, as illustrated below.

● Full ◉ 3/4 full ◉ 1/2 full ◉ 1/4 full ○ Empty

Function of detergent

The chemical ingredients that compose the detergent are necessary to remove, crush and dispense all dirt out of the dishwasher. Most of the commercial quality detergents are suitable for this purpose.

⚠ WARNING

- Proper Use of Detergent
  Use only detergent specifically made for dishwashers use. Keep your detergent fresh and dry.
  Do not fill detergent into the dispenser until you are ready to start the dishwasher.
- **Dishwasher detergent is corrosive! Keep dishwasher detergent out of the reach of children.**

Filling The Rinse Aid Reservoir

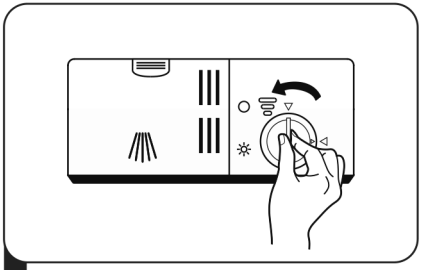

1 Remove the rinse aid reservoir cap by rotating it anti-clockwise.

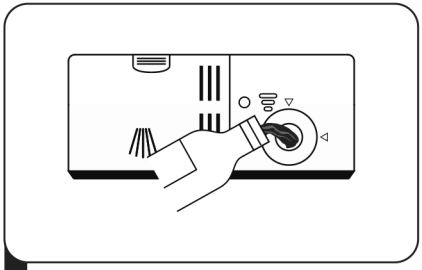

2 Carefully pour the rinse aid into the dispenser, whilst avoiding over filling.

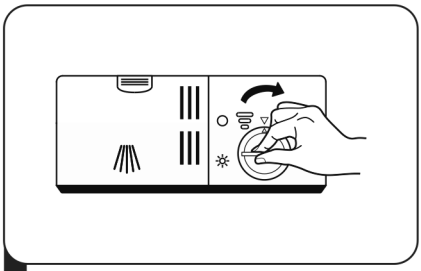

3 Close the rinse aid reservoir cap by rotating it clockwise.

NOTE:

Clean up any spilled rinse aid with an absorbent cloth to avoid excessive foaming during the next wash.

Adjusting the rinse aid reservoir

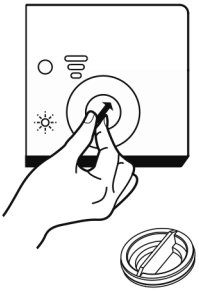

Remove the rinse aid reservoir cap. Turn the rinse aid indicator dial to a number. The higher the number, the more rinse aid the dishwasher uses.
If the dishes are not drying properly or are spotted, adjust the dial to the next higher number until your dishes are spot-free. Reduce it if there are sticky whitish stains on your dishes or a bluish film on glassware or knife blades.

Filling The Detergent Dispenser

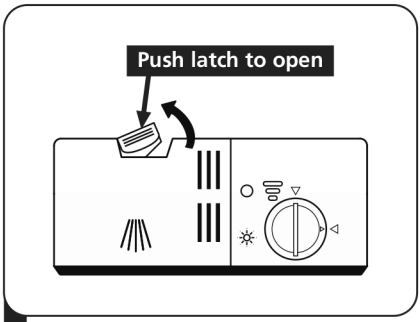

1 Press the release latch on the detergent dispenser to open the cover.

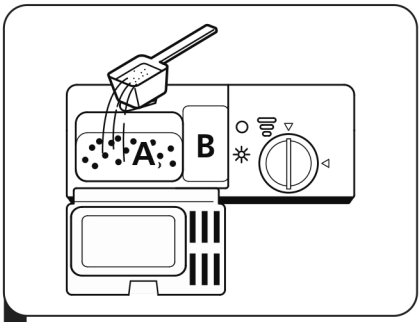

2 Add detergent into the larger cavity (A for main wash. For more heavily soiled wash loads, also add some detergent into the smaller cavity (B) for release during the pre-wash.

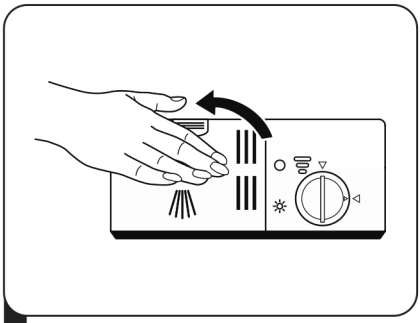

3 Close the cover and press on it until it locks into place.

NOTE:

Please observe the manufacturer's recommendations on the detergent packaging.

Wash Cycle Table

The table below shows which programs are best for the levels of food residue on them and how much detergent is needed. It also show various information about the programs.Consumption values and program duration are only indicative except for ECO program.

(●) indicates that the program uses rinse aid in the last rinse.

Program	Description Of Cycle	Detergent Pre/Main Wash	Running Time(min)	Energy (kWh)	Water (L)	Rinse Aid
Intensive	Pre-wash(50℃) Wash(65℃) Rinse Rinse Rinse(70℃) Drying	4/12g (1 tab)	160	1.250	12.5	●
Universal	Pre-wash(45℃) Wash(60℃) Rinse Rinse(70℃) Drying	4/12g (1 tab)	150	1.050	12.5	●
ECO (*EN60436)	Pre-wash Wash(45℃) Rinse(65℃) Drying	4/12g (1 tab)	220	0.723	8.0	●
Glass	Pre-wash Wash(45℃) Rinse Rinse(60℃) Drying	4/12g (1 tab)	95	0.700	10.5	●
90 Min	Wash(55℃) Wash(65℃) Rinse(70℃) Drying	16g (1 tab)	90	1.150	11.0	●
Rapid	Wash(50℃) Rinse(45℃) Rinse(45℃)	10g (1 tab)	30	0.540	7.0	●
Self-Cleaning	Pre-wash Wash(70℃) Rinse Rinse(70℃) Drying	16g (1 tab)	145	0.736	9.5	●

NOTE:

ECO (*EN60436) : The ECO program is suitable to clean normally soiled tableware, that for this use it is the most efficient program in terms of its combined energy and water consumption, and it is used to assess compliance with the EU ecodesign legislation.

Saving Energy

1. Pre-rinsing of tableware items leads to increased water and energy consumption and is not recommended.
2. Washing tableware in a household dishwasher usually consumes less energy and water in the use phase than hand dishwashing when the household dishwasher is used according to the instructions.

Starting A program

1. Draw out the lower and upper basket, load the dishes and push them back. It is commended to load the lower basket first, then the upper one.
2. Pour in the detergent.
3. Plug the dishwasher into a suitable socket. Make sure that the water supply is turned on to full pressure.
4. Close the door, press the Power button.
5. Choose a program, the response light will turn on. Then press the Start/Pause button, the dishwasher will start its cycle.

Changing The Program Mid-cycle

A program can only be changed if it has been running for a short period of time only, otherwise the detergent may have already been released or the wash water with detergent has already been drained. If this is the case, the dishwasher needs to be reset and the detergent dispenser must be refilled. To reset the dishwasher, follow the instructions below:

1. Press the Start/Pause button to pause the washing.
2. Press Program button more than three seconds the machine will be in program selection mode.
3. You can change the program to the desired cycle setting.
4. Press the Start/Pause button, the dishwasher will start.

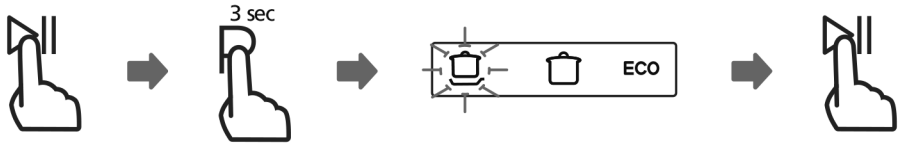

Forget To Add A Dish?

A forgotten dish can be added any time before the detergent dispenser opens.

If this is the case, follow the instructions below:

1. Press the Start/Pause button to pause the washing.
2. After the spray arms stop spinning, you can open the door completely.
3. Add the forgotten dishes.
4. Close the door.
5. Press the Start/Pause button, the dishwasher will continued to run after 10 seconds.

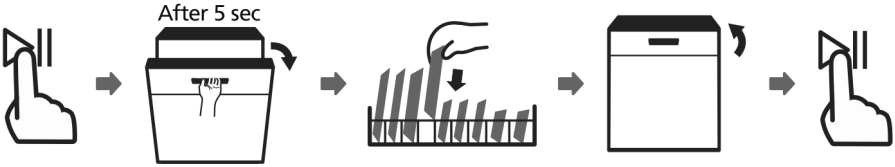

⚠ WARNING

It is dangerous to open the door mid-cycle, as hot steam may scald you.

ERROR CODES

If there is a malfunction the dishwasher will display an error code. The following table shows possible error codes and their causes.

Codes	Meanings	Possible Causes
E1	Longer inlet time.	The tap is not open, or water intake is restricted, or water pressure is too low.
E3	Not reaching required temperature.	Heating element malfunction.
E4	Overflow.	An element of the dishwasher leaks.
Ed	Dishwasher not operating from the control panel.	Open circuit or break in wiring stopping operation.

⚠ WARNING

- If overflow occurs, turn off the main water supply before calling a service.
- If there is water in the base pan because of an overfill or small leak, the water should be removed before restarting the dishwasher.
- If there is an error code that cannot be solved, please request professional assistance or contact your supplier.

TROUBLESHOOTING TIPS

Before Calling For Service

Reviewing the charts on the following pages may help to solve basic issues.

Problem	Possible causes	Solution
Dishwasher doesn't start	Fuse blown, or the circuit breaker tripped.	Replace fuse or reset circuit breaker. Remove any other appliances sharing the same circuit with the dishwasher.
	Power supply is not turned on.	Make sure the dishwasher is turned on and the door is closed securely. Make sure the power cord is properly plugged into the wall socket.
	Door of dishwasher not properly closed.	Make sure to close the door properly and latch it.
Water not pumped from dishwasher	Kink in drain hose	Check drain hose.
	Filter clogged.	Check the coarse filter. (see section titled " Internal Care ")
	Kitchen sink clogged.	Check the kitchen sink to make sure it is draining well. If the problem is the kitchen sink that is not draining , you may need a plumber rather than a service person for dishwashers.
Foam in the tub	Improper detergent	Use only the special dishwasher detergent to avoid suds. If this occurred, open the dishwasher and let suds evaporate. Add 4.5 litres of cold water to the tub. Close and latch the dishwasher, then Start any wash cycle to drain out the water. Repeat if necessary.
	Spilled rinse aid.	Always wipe up rinse aid spills immediately.
Stained tub interior	Detergent with colourant may have been used.	Make sure that the detergent has no colourant.
White film on inside surface	Hard water minerals.	To clean the interior, use a damp soft cloth with dishwasher detergent and wear rubber gloves. Never use any other cleaner other than dishwasher detergent to avoid foaming.

Problem	Possible Causes	What To Do
There are rust stains on cutlery	The affected items are not corrosion resistant.	Avoid washing items that are not corrosion resistant in the dishwasher.
	A program was not run after dishwasher salt was added. Traces of salt have gotten into the wash cycle.	Always run the quick wash program. without any crockery in the dishwasher and without selecting the Turbo function (if present), after adding dishwasher salt.
	Softener lid is loose.	Check the lid. Ensure it is closed.
Knocking noise in the wash cabinet	The spray arm is knocking against an item in a basket.	Interrupt the program, and rearrange the items which are obstructing the spray arm.
Rattling noise in the wash cabinet	An Item of crockery is loose in the wash cabinet.	Interrupt the program, and rearrange the items of crockery.
Knocking noise in the water pipes	This may be caused by on-site installation or the cross-section of the piping.	This has no influence on the dishwasher function. If in doubt, contact a qualified plumber.
The dishes are not clean	The dishes were not loaded correctly.	See "Preparing And Loading Dishes".
	The program was not powerful enough.	Select a more intensive program.
	Not enough detergent was dispensed.	Use more detergent, or change your detergent.
	Item are blocking the path of spray arms.	Rearrange the items so that the spray arms can rotate freely.
	The filter combination in the base of wash cabinet is not clean or is not correctly fitted. This may cause the spray arm jets to get blocked.	Clean and/or fit the filter correctly. Clean the spray arm jets.

Problem	Possible Causes	What To Do
Cloudiness on glassware.	Combination of soft water and too much detergent.	Use less detergent if you have soft water and select a shorter cycle to wash the glassware and to get them clean.
Black or grey marks on dishes	Aluminium utensils have rubbed against dishes	Use a mild abrasive cleaner to eliminate those marks.
Detergent left in dispenser cups	Dishes block detergent dispenser cups	Re-load the dishwasher to prevent this.
The dishes are not drying	Improper loading	Use gloves if detergent residue can be found on dishes to avoid skin irritation.
	Dishes are removed too soon	Do not empty your dishwasher immediately after washing. Open the door slightly so that the steam can escape. Begin unloading the dishwasher only once the dishes are barely warm to the touch. Empty the lower basket first. This prevents water form dropping off dishes in the upper basket.
	Wrong program has been selected.	In short programs the washing temperature is lower. This also lowers cleaning performance. Choose a program with a long washing time.
	Use of cutlery with a low-quality coating.	Water drainage is more difficult with these items. Cutlery or dishes of this type are not suitable for washing in the dishwasher.

⚠WARNING

Self-repair or non-professional repair may cause serious risks to the safety of the user of the appliance and impact warranty.

TECHNICAL INFORMATION

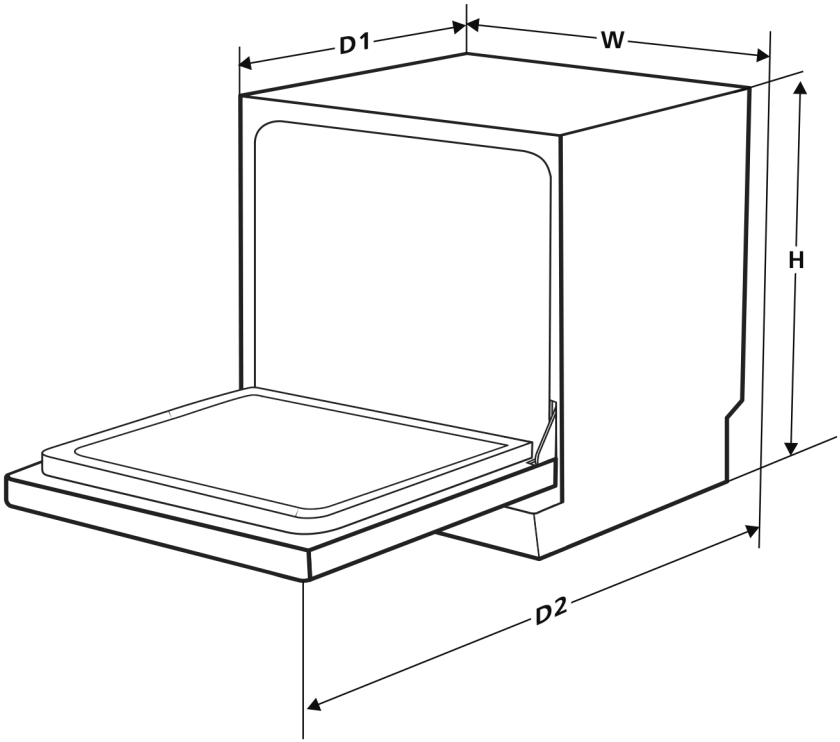

Height (H)	590mm
Width (W)	550mm
Depth (D1)	500mm (with the door closed)
Depth (D2)	964mm (with the door opened 90°)

Product information sheet (EN60436)

Supplier's name or trade mark: Baridi

Supplier's address ([b]): Dellonda Ltd. Kempson way, Bury St Edmunds. Suffolk. IP32 7AR

Model identifier: DH86, DH87 and DH88

General product parameters:

Parameter	Value	Parameter	Value	
Rated capacity ([a]) (ps)	8	Dimensions in cm	Height	59
			Width	55
			Depth	50
EEI ([a])	61,8	Energy efficiency class ([a])	F ( )	
Cleaning performance index ([a])	1,125	Drying performance index ([a])	1,065	
Energy consumption in kWh [per cycle], based on the eco programme using cold water fill. Actual energy consumption will depend on how the appliance is used.	0,723	Water consumption in litres [per cycle], based on the eco program. Actual water consumption will depend on how the appliance is used and on the hardness of the water.	8,0	
Program duration ([a]) (h:min)	3:40	Type	Free standing	
Airborne acoustical noise emissions ([a]) (dB(A) re 1 pW)	49	Airborne acoustical noise emission class ([a])	C ([c])	
Off-mode (W)	0,49	Standby mode (W)	N/A	
Delay start (W) (if applicable)	1,00	Networked standby (W) (if applicable)	N/A	

Minimum duration of the guarantee offered by the supplier ([b]): 12 Months **(from date of purchase)**

Additional information:

Weblink to the supplier's website, where the information in point 6 of Annex II to Commission Regulation (EU) 2019/2022 ([1]) ([b]) is found: **www.dellonda.co.uk**

([a]) for the eco program.
([b]) changes to these items shall not be considered relevant for the purposes of paragraph 4 of Article 4 of Regulation (EU) 2017/1369.
([c]) if the product database automatically generates the definitive content of this cell the supplier shall not enter these data.

([1]) Commission Regulation (EU) 2019/2022 of 1 October 2019 laying down eco design requirements for household dishwashers pursuant to Directive 2009/125/EC of the European Parliament and of the Council amending Commission Regulation (EC) No 1275/2008 and repealing Commission Regulation (EU) No 1016/2010 (see page 267 of this Official Journal).

Environment Protection, Waste Electrical and Waste Electronic Equipment Regulations (WEEE)

Recycle unwanted packaging materials. When this product is no longer required, or has reached the end of its useful life, please dispose of in an environmentally friendly way. Drain any fluids (if applicable) into approved containers, in accordance with local waste regulations. It is our policy to continually improve products and we reserve the right to alter data, specifications and parts without prior notice. No liability is accepted for incorrect use of this product. Guarantee is 12 months from purchase date, proof of which is required for any claim.

Dellonda Limited, Sole UK Distributor of Baridi

Kempson Way, Suffolk Business Park, Bury St Edmunds, Suffolk. IP32 7AR

01284 757575 support@dellonda.co.uk www.dellonda.co.uk