ASSEMBLY INSTRUCTIONS

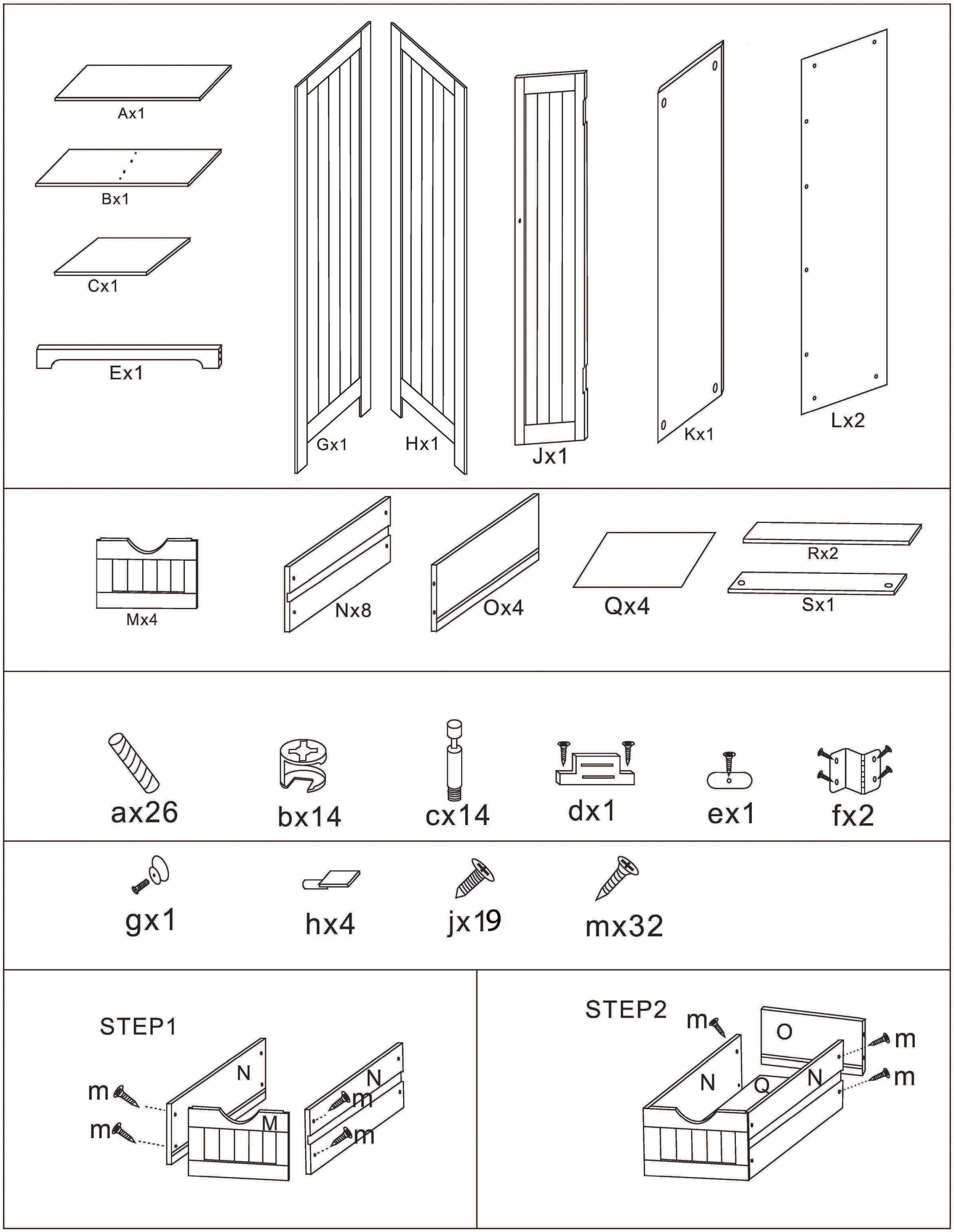

STEP3

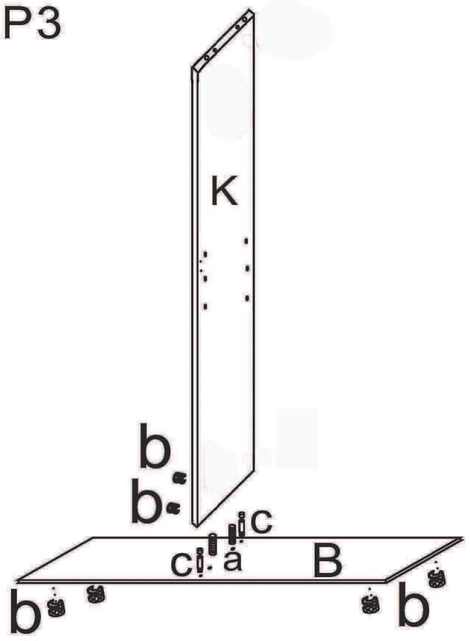

STEP4

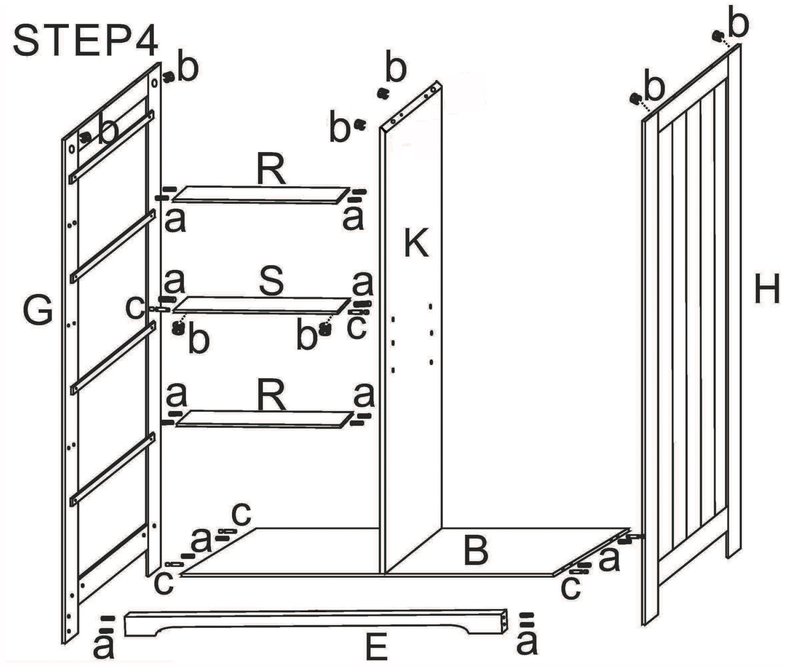

STEP5

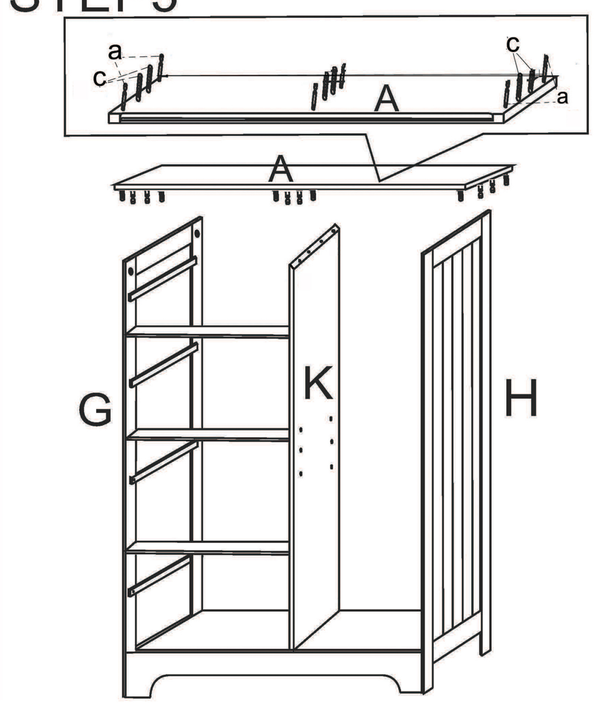

STEP6

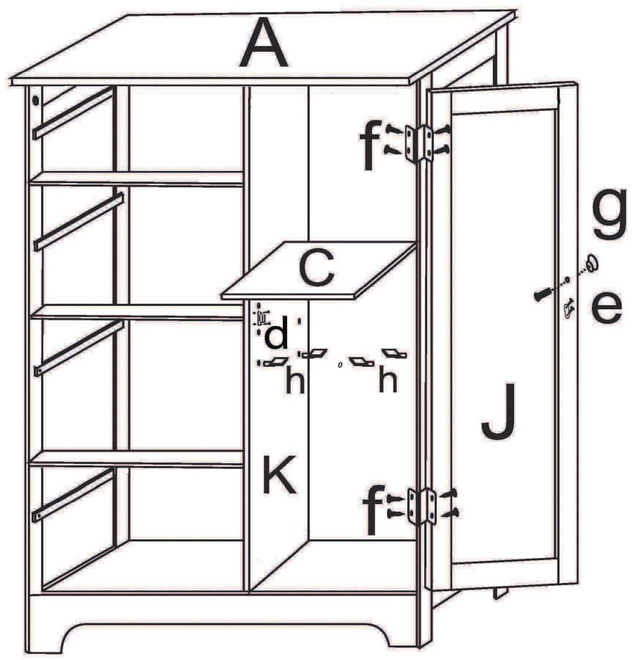

STEP7

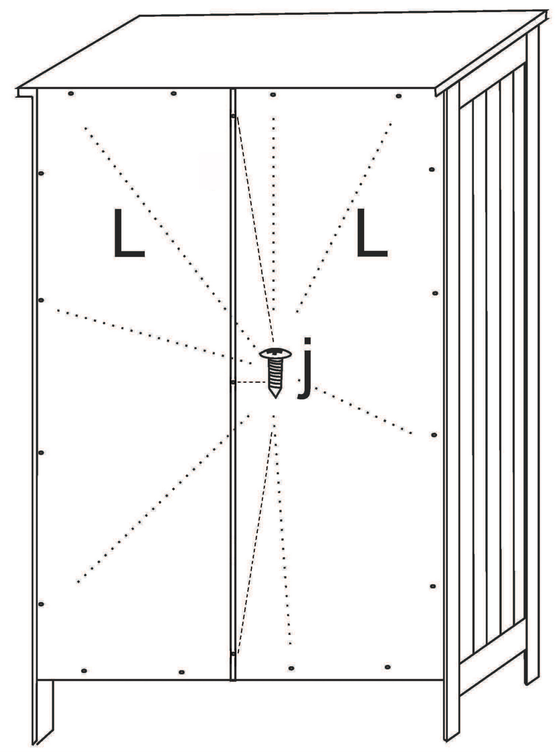
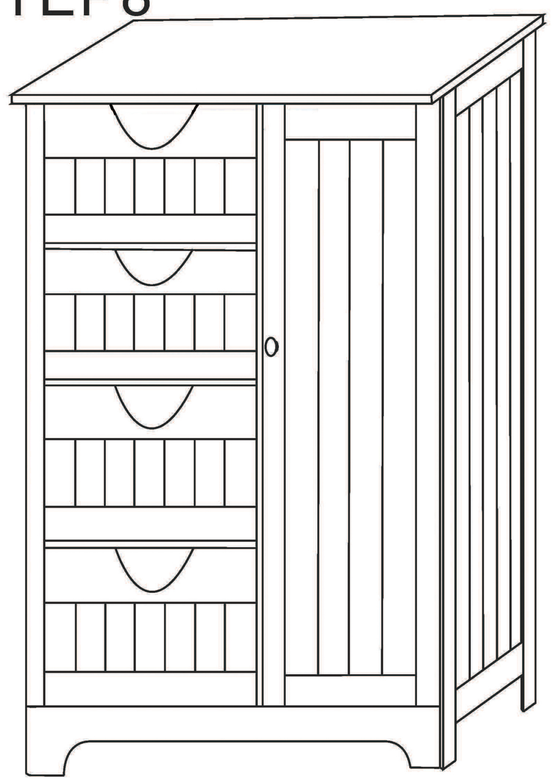
STEP8