KSAG8190,1,2,3,5,8DL
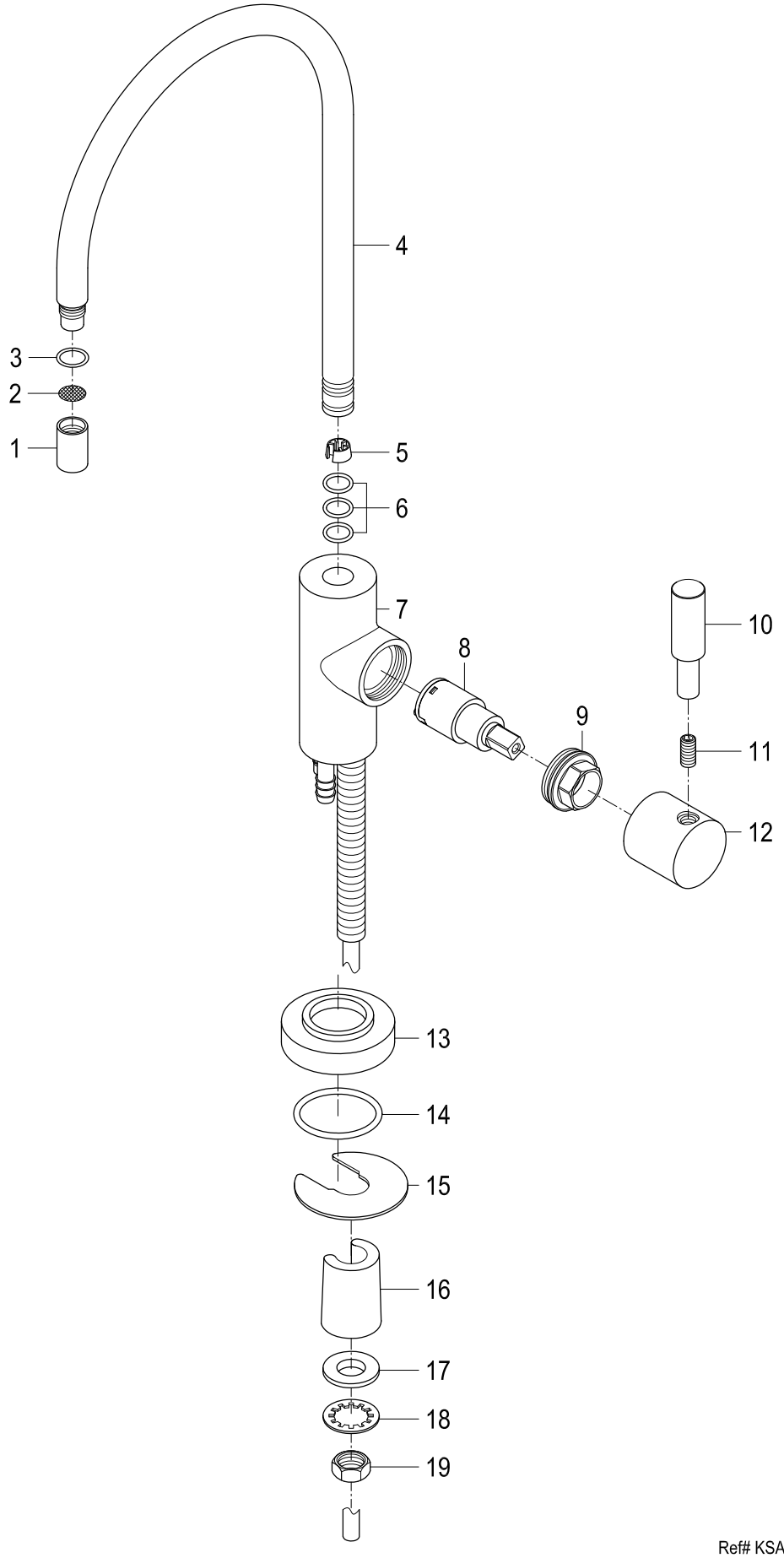
Single Handle Water Filtration Faucet