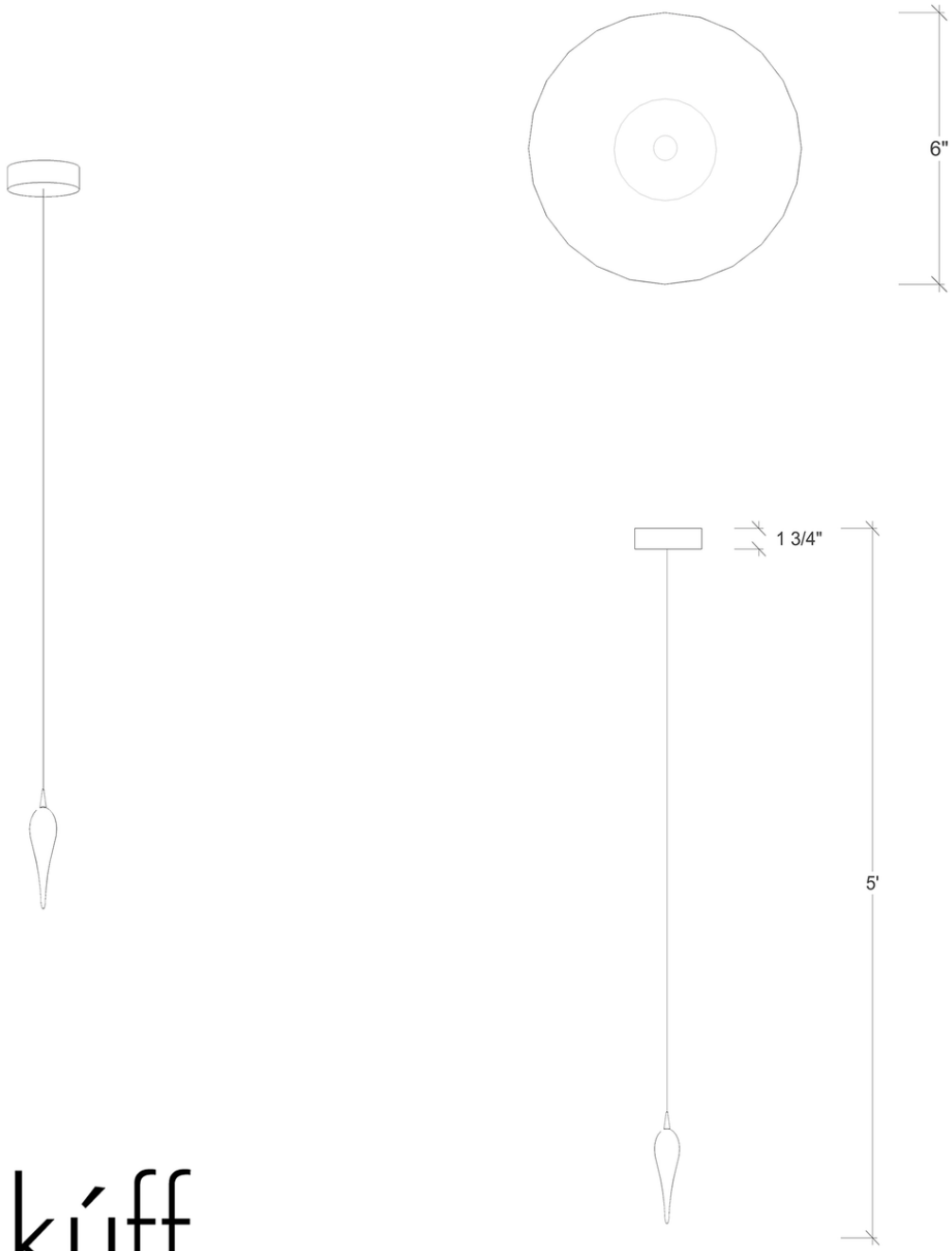

BREATH COLLECTION

Spear 1

Shown

1 Pendants on a Standard Style Canopy

Canopy Size 6"dia

Glass Size 2.25"dia x 8"h

Overall Height 5ft

Available Options

Glass Sizes	2.25"dia x 8"h
Bulbs	LED G4 - 2 Watt - 200 Lumens
Overall Height	5ft Standard, Adjustable
Canopy Style	Standard
Glass Texture	Subtle Vertical Ridges
Glass Colors (1)	Clear
Canopy Finish	Matte Silver ,Matte White ,Antique Bronze, Custom.

Product Details

The stalactite-like Spear pendant is a blown, then cast glass pendant with subtle vertical ridges and a bubbly texture within.

Wires are adjustable - even after installation - and come standard at 5 feet long. Pendants can be hung all at the same height, in a grouped, or staggered formation, depending on your preference.

Each fixture included : canopy , transformer , lightbulbs and up to 5ft adjustable wires.

As all of our items are hand-made, sizes are approximate. Variations in size, color, shape and texture (including but not limited to fissures, bubbles, crackling, and crazing in the glass) are inherent to all of our glass.

Shakúff
custom glass lighting & décor

Copyright Shakuff LLC
34 35th Street, Broooklyn NY 11232 T. 212.675.0383 F. 718.407.4883 E. info@shakuff.com www.shakuff.com

UL LISTED

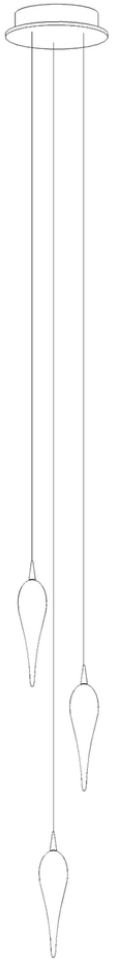

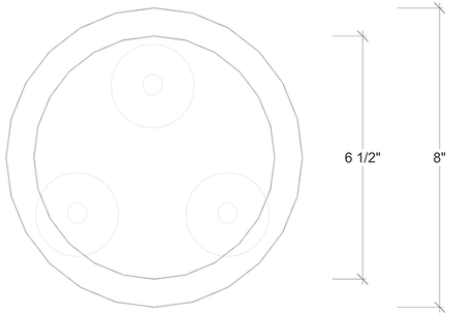

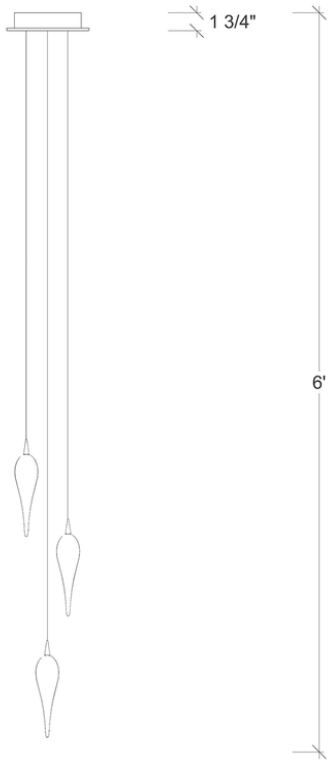

BREATH COLLECTION

Spear 3

Shown

3 Pendants on a Floating Style Canopy

Canopy Size 8"dia

Glass Size 2.25"dia x 8"h

Overall Height 6ft

Available Options

Glass Sizes	2.25"dia x 8"h
Bulbs	LED G4 - 2 Watt - 200 Lumens
Overall Height	6ft Standard, Adjustable
Canopy Style	Floating
Glass Texture	
Glass Colors (1)	Clear
Canopy Finish	Matte Silver ,Matte White ,Antique Bronze, Custom.

Product Details

The stalactite-like Spear pendant is a blown, then cast glass pendant with subtle vertical ridges and a bubbly texture within.

Wires are adjustable - even after installation - and come standard at 6 feet long. Pendants can be hung all at the same height, in a grouped, or staggered formation, depending on your preference.

Each fixture included : canopy , transformer , lightbulbs and up to 6ft adjustable wires.

As all of our items are hand-made, sizes are approximate. Variations in size, color, shape and texture (including but not limited to fissures, bubbles, crackling, and crazing in the glass) are inherent to all of our glass.

Shakúff
custom glass lighting & décor

Copyright Shakuff LLC
34 35th Street, Broooklyn NY 11232 T. 212.675.0383 F. 718.407.4883 E. info@shakuff.com www.shakuff.com

UL LISTED

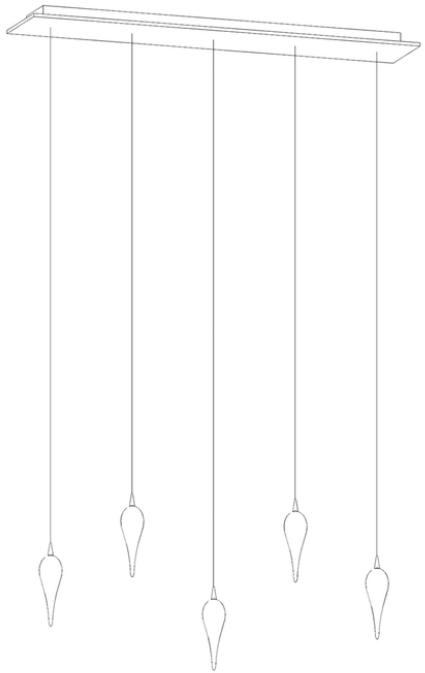

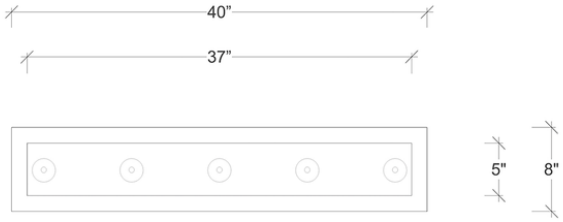

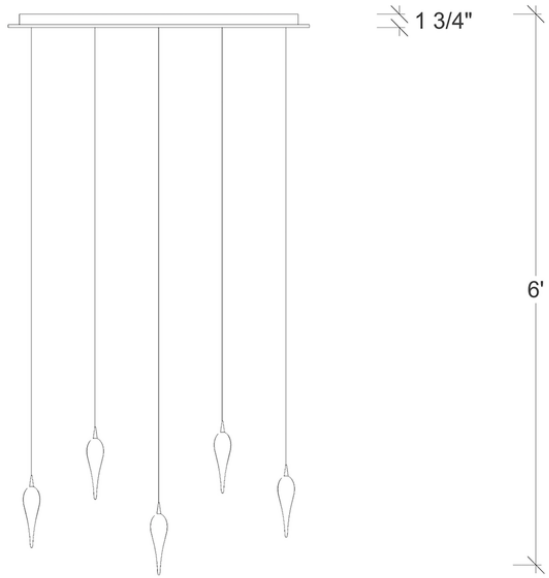

BREATH COLLECTION

Spear 5

Shown

5 Pendants on a Floating Style Canopy

Canopy Size 8" x 40"

Glass Size 2.25"dia x 8"h

Overall Height 6ft

Available Options

Glass Sizes	2.25"dia x 8"h
Bulbs	LED G4 - 2 Watt - 200 Lumens
Overall Height	6ft Standard, Adjustable
Canopy Style	Floating
Glass Texture	
Glass Colors (1)	Clear
Canopy Finish	Matte Silver ,Matte White ,Antique Bronze, Custom.

Product Details

The stalactite-like Spear pendant is a blown, then cast glass pendant with subtle vertical ridges and a bubbly texture within.

Wires are adjustable - even after installation - and come standard at 6 feet long. Pendants can be hung all at the same height, in a grouped, or staggered formation, depending on your preference.

Each fixture included : canopy , transformer , lightbulbs and up to 6ft adjustable wires.

As all of our items are hand-made, sizes are approximate. Variations in size, color, shape and texture (including but not limited to fissures, bubbles, crackling, and crazing in the glass) are inherent to all of our glass.

Shakúff
custom glass lighting & décor

Copyright Shakuff LLC
34 35th Street, Broooklyn NY 11232 T. 212.675.0383 F. 718.407.4883 E. info@shakuff.com www.shakuff.com

UL LISTED

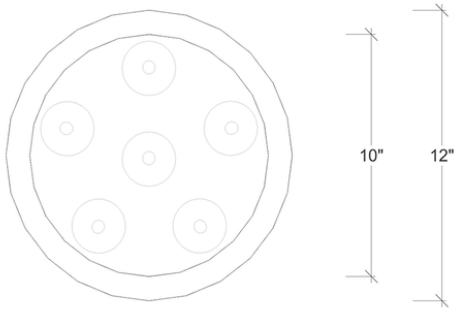

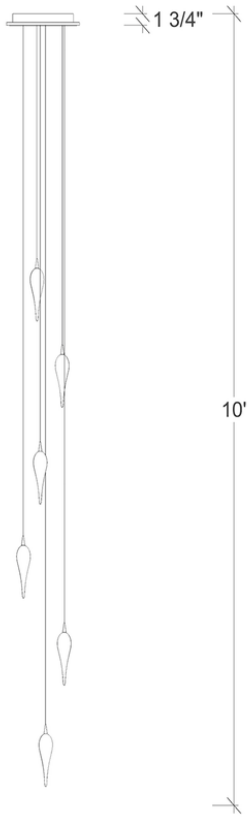

BREATH COLLECTION

Spear 6

Shown

6 Pendants on a Floating Style Canopy

Canopy Size 12"dia

Glass Size 2.25"dia x 8"h

Overall Height 10ft

Available Options

Glass Sizes	2.25"dia x 8"h
Bulbs	LED G4 - 2 Watt - 200 Lumens
Overall Height	10ft Standard, Adjustable
Canopy Style	Floating
Glass Texture	
Glass Colors (1)	Clear
Canopy Finish	Matte Silver ,Matte White ,Antique Bronze, Custom.

Product Details

The stalactite-like Spear pendant is a blown, then cast glass pendant with subtle vertical ridges and a bubbly texture within.

Wires are adjustable - even after installation - and come standard at 10 feet long. Pendants can be hung all at the same height, in a grouped, or staggered formation, depending on your preference.

Each fixture included : canopy , transformer , lightbulbs and up to 10ft adjustable wires.

As all of our items are hand-made, sizes are approximate. Variations in size, color, shape and texture (including but not limited to fissures, bubbles, crackling, and crazing in the glass) are inherent to all of our glass.

Shakúff

custom glass lighting & décor

Copyright Shakuff LLC

34 35th Street, Broooklyn NY 11232 T. 212.675.0383 F. 718.407.4883 E. info@shakuff.com www.shakuff.com

UL LISTED

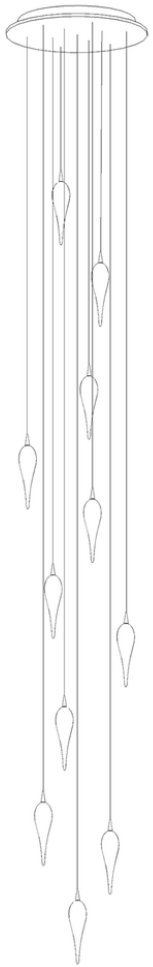

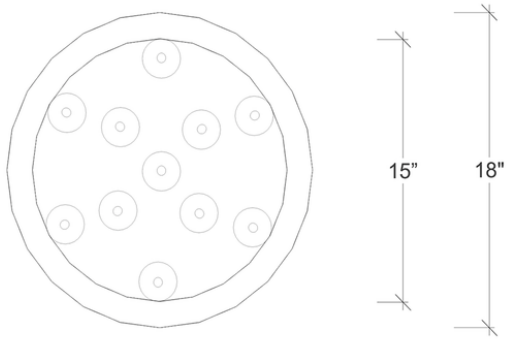

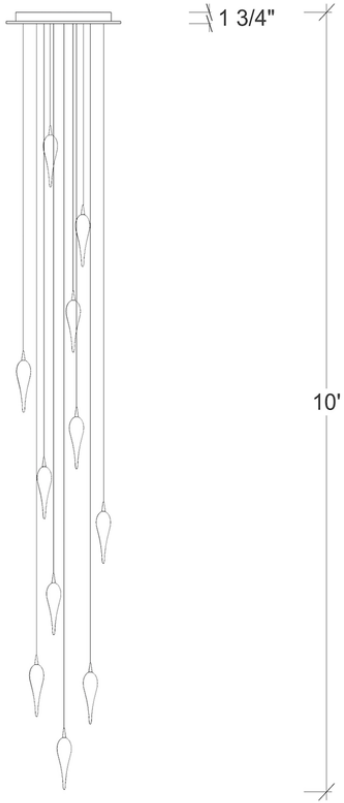

BREATH COLLECTION

Spear 11

Shown

11 Pendants on a Floating Style Canopy

Canopy Size 18"dia

Glass Size 2.25"dia x 8"h

Overall Height 10ft

Available Options

Glass Sizes	2.25"dia x 8"h
Bulbs	LED G4 - 2 Watt - 200 Lumens
Overall Height	10ft Standard, Adjustable
Canopy Style	Floating
Glass Texture	
Glass Colors (1)	Clear
Canopy Finish	Matte Silver ,Matte White ,Antique Bronze, Custom.

Product Details

The stalactite-like Spear pendant is a blown, then cast glass pendant with subtle vertical ridges and a bubbly texture within.

Wires are adjustable - even after installation - and come standard at 10 feet long. Pendants can be hung all at the same height, in a grouped, or staggered formation, depending on your preference.

Each fixture included : canopy , transformer , lightbulbs and up to 10ft adjustable wires.

As all of our items are hand-made, sizes are approximate. Variations in size, color, shape and texture (including but not limited to fissures, bubbles, crackling, and crazing in the glass) are inherent to all of our glass.

Shakúff

custom glass lighting & décor

Copyright Shakuff LLC

34 35th Street, Broooklyn NY 11232 T. 212.675.0383 F. 718.407.4883 E. info@shakuff.com www.shakuff.com

UL LISTED

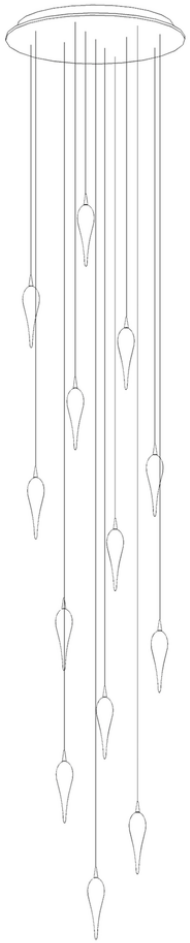

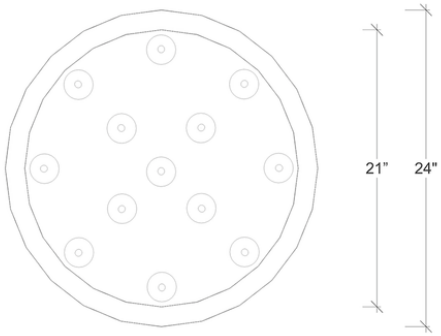

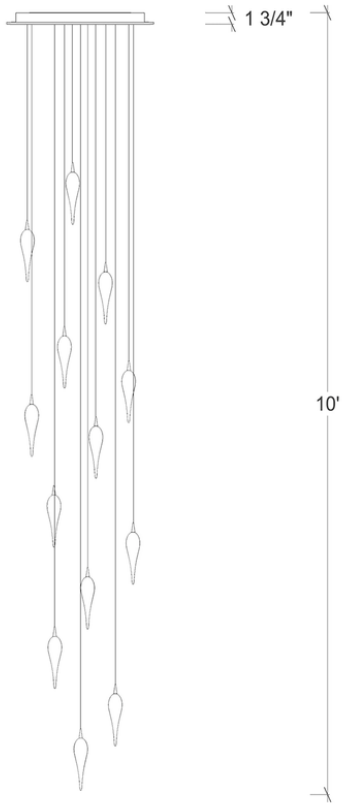

BREATH COLLECTION

Spear 13

Shown

13 Pendants on a Floating Style Canopy

Canopy Size 24"dia

Glass Size 2.25"dia x 8"h

Overall Height 10ft

Available Options

Glass Sizes	2.25"dia x 8"h
Bulbs	LED G4 - 2 Watt - 200 Lumens
Overall Height	10ft Standard, Adjustable
Canopy Style	Floating
Glass Texture	
Glass Colors (1)	Clear
Canopy Finish	Matte Silver ,Matte White ,Antique Bronze, Custom.

Product Details

The stalactite-like Spear pendant is a blown, then cast glass pendant with subtle vertical ridges and a bubbly texture within.

Wires are adjustable - even after installation - and come standard at 10 feet long. Pendants can be hung all at the same height, in a grouped, or staggered formation, depending on your preference.

Each fixture included : canopy , transformer , lightbulbs and up to 10ft adjustable wires.

As all of our items are hand-made, sizes are approximate. Variations in size, color, shape and texture (including but not limited to fissures, bubbles, crackling, and crazing in the glass) are inherent to all of our glass.

Shakúff

custom glass lighting & décor

Copyright Shakuff LLC

34 35th Street, Broooklyn NY 11232 T. 212.675.0383 F. 718.407.4883 E. info@shakuff.com www.shakuff.com

UL LISTED