CABINETS TO GO

CHARLOTTE

Vanity Top Series

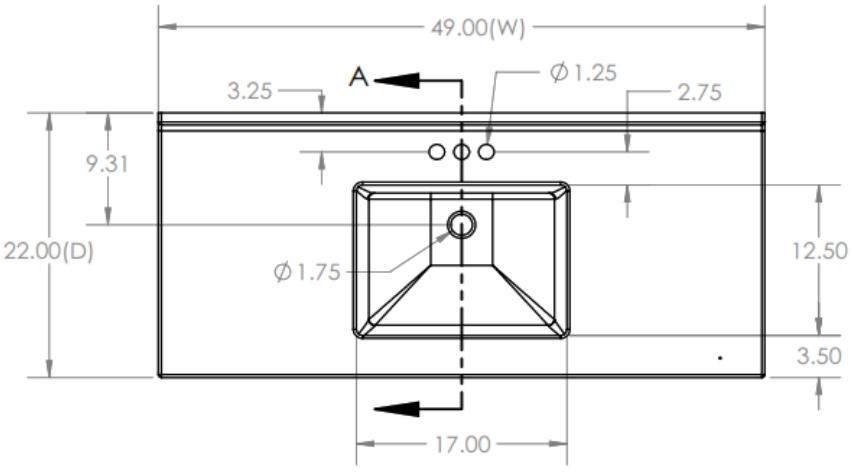

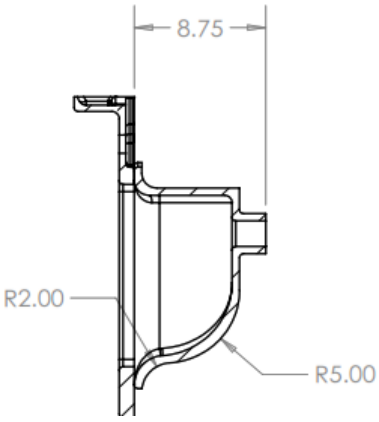

AVAILABLE COLORS

FROST

MIDNIGHT CHROME

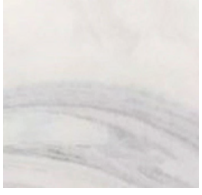

CARRARA

AVAILABLE SIZES

22” x 25”	22” x 37” Right	22” x **49**”	**22" x 61" Double Bowl**
22” x 31”	22” x 37” Left	22” x **55**”	**22" x 73" Double Bowl**
22” x 37”	22” x 4**3**”	22” x 61” **Single** Bowl	

Specifications

Collection Name	Charlotte 22”	Bowl shape	Square
Material	Cultured Marble or Cultured Granite	Bowl Depth	7”
Top thickness	1”	Includes Overflow	No
Edge Profile	NA	Depth (inches)	22”
Colors	All available	Width (inches)	25” to 73”
Finish	Gloss or Matte	Integral Backsplash	Yes
Faucet mount type	4" Center set	Accesories Adaptors	1 or 3
Number of bowls	1		

IAPMO Tolerances

Inner plate thickness	18 to 22 mm
Bowl thickness	More than 6 mm
Side difference	Less than 1/8”
Warping	Less than 3 mm