Green Glide Specifications Sheet

DESCRIPTION

The Star Green Glide is a hidden panel-mounting system, primarily intended for use in CNC / CAD enabled shops. Typically, the Star Green Glide will be used in assemblies where all the parts, both panels and furring, are precision cut in the shop prior to delivery and installation – resulting in very fast and accurate installations. The "keyhole" shape of the clip allows for precision location of the clips and the corresponding 5/16" Mounting Screws (supplied). The clip is compression fitted into a 1/2" deep routed pocket, which is cut, either using the template, or during CNC cutting. In either case, the corresponding screw pattern for the fasteners may be pre-drilled (5mm) and the 5/16" mounting screws inserted on site. The 1/2" liftoff allows for an extremely secure and robust connection between the fasteners and clip. **Note:** As with all Star Hanger systems, an on-site alternative to CNC/CAD layout the Green Glide will accept 5/16" Alignment Pin 5/16" (SKU 311). The pin can be used to mark out the exact layout of the corresponding mounting screw. **Note:** The Green Glide Triangle is an especially designed companion clip to be used in pre-assembled corner installations and other difficult assemblies.

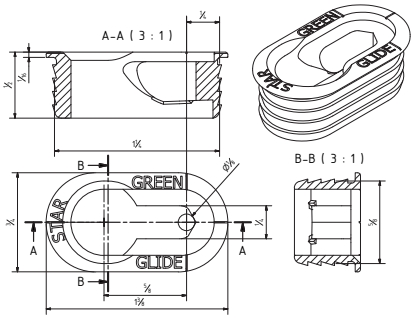

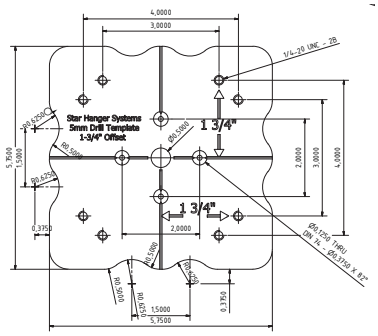

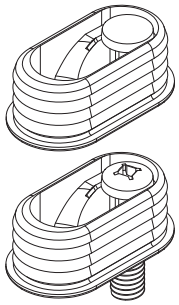

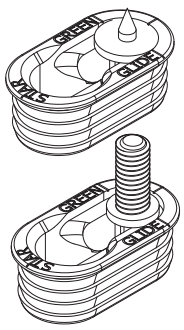

SPECIFICATION

MATERIAL: Nylon 66, reinforced with 30% fiber glass

BENEFITS: Very fast, when used with CAD / CNC layout and machining. Durable and secure wood to wood, or panel to furring, hidden connection.

SPACING: Standard layout using templates is a 2" x 2" offset from all corners. For small panels: 4 clips per panel. On larger sheets: standard layout will be as above with: min 24" o.c. spacing.

LOAD: Typical load per clip: Max 25 lbs per clip.

INSTALLATION

The Green Glide is designed to be used pre-engineered panel furring systems. That has been laid out in CAD and cut on a CNC Router. This gives the fabricator the ability to exactly control the placement of wood panels. However, these clips may also be installed using routers and templates (Green Glide router templates,SKU 911,350,915.) The compression inserts can be shop or field installed. The furring is precisely installed, the 5/16" Mounting Screw are placed and the panel is pushed in and down to lock into the exact position.

Please see www.Starhanger.com > Technical for complete Installation Guide

OTHER GREEN GLIDE RESOURCES

SHOP DRAWINGS:
https://www.starhanger.com/pages/downloable-drawing

INTRODUCTION ANIMATIONS:
https://www.starhanger.com/pages/animation-videos-info

INSTRUCTION VIDEOS:
www.starhanger.com/pages/installation-videos

PRODUCT SPECIFICATION:
www.tarhanger.com/pages/product-specifications

SALES & GENERAL QUESTIONS:
Sam Porter, P. 803-250-9608 E. sporter@starhanger.com

TECHNICAL QUESTIONS:
Charles Porter, P. 803-730-4463 E.cporter@starhanger.com

STRENGTH TESTING

With 3/4" - 45 lb. particle board:

- Tensile Failure (Horizontal pull) = 160 lbs. / Working Strength, Pull from Furring = 25 lbs.
- Shear Failure (Vertical weight holding) = 530 lbs. / Working Strength, Weight holding = 50 lbs.

Note: *On vertical surfaces, the Star Blue Zero is rated to 10 pounds per clip. On ceilings, the mounting system should be used only if adequate precautions are in place.*

USEFUL ACCESSORIES:

Green Glide Triangle (5/16" Screws Included) Green Glide Triangle SKU 303

Pilot Drill: 5MM Self Centering & Stop SKU 913

Alignment pins: Green Glide alignment pin SKU 311

Panel Adjuster: Panel Adjuster SKU 920

Green Glide, Drill Template, 2" Offset (1 Guide, Drill, Stops, 2 Screws) Green Glide template SKU, 350

Green Glide, Router Template (1 Glide, Stops, 2 Screws): Green Glide router template SKU 911

ORDER: GREEN GLIDE, SKU 300