Star Hanger SYSTEMS
"Hidden Fastener Specialists" | www.starhanger.com

360 Countertop Bolt Specification Sheet

DESCRIPTION

The 360 Countertop Bolt is an improved joint fastener, which tightly draws large counter tops and other heavy items together. The 360 Countertop Bolt is a custom made 1/4" x 3-1/2" x 3/16" hex socket (Allen) head which allows for easier and faster installation when used with the 365 Ball-end Allen wrench. Quick and easy installation is also aided with our custom router template and the Star router bit. The 360 Countertop Bolt is a high strength tempered Allen bolt and is the strongest countertop bolt available.

Note: For fast shop execution, both CAD files and a CNC cut 3/8" phenolic template are available.

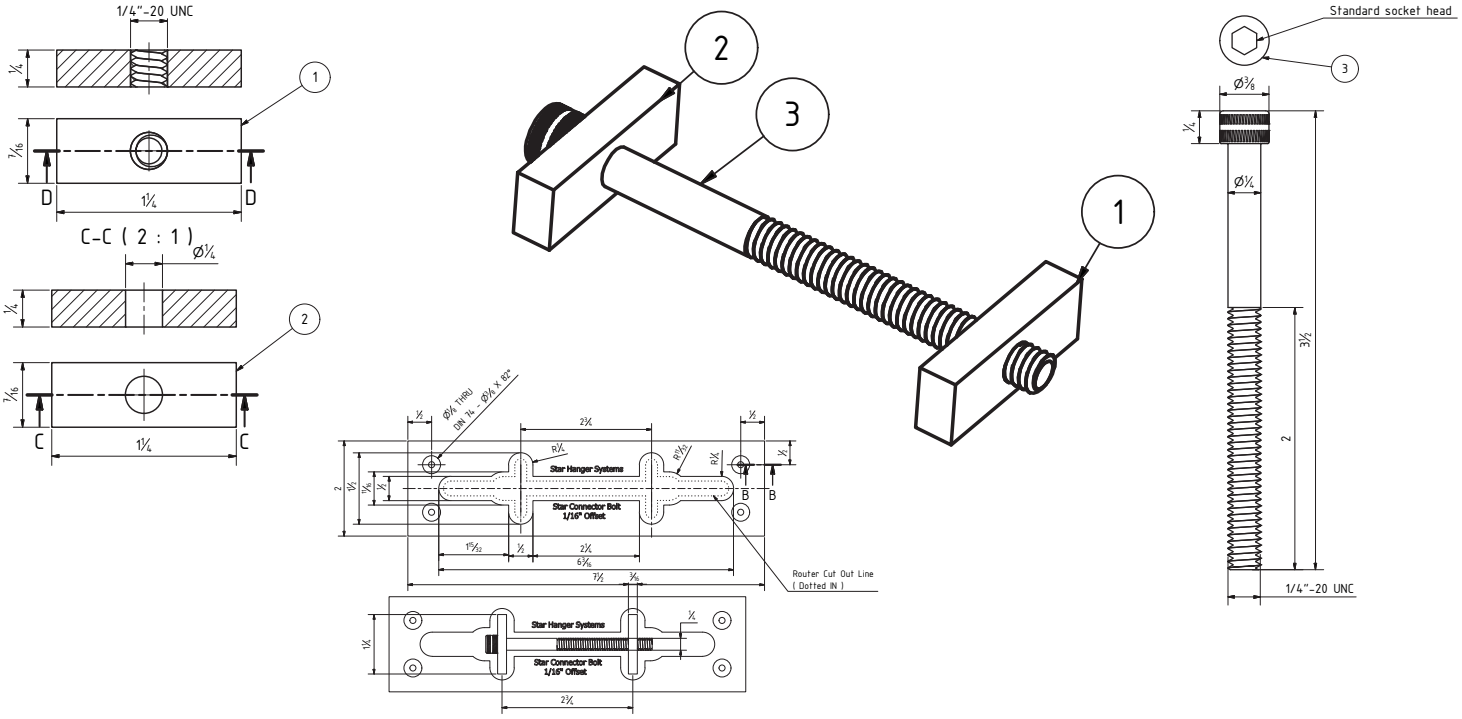

INSTALLATION

The 360 Countertop Bolt is installed in a routed pocket just like a traditional countertop bolt. However, our bolt has an Allen head, which allows tightening with a standard ball end Allen wrench. When used in combination with a hand drill, this vastly speeds up installation times.

Please see www.Starhanger.com > Technical for complete Installation Guide

OTHER COUNTERTOP BOLT RESOURCES

SHOP DRAWINGS:
https://www.starhanger.com/pages/downloable-drawing

INTRODUCTION ANIMATIONS:
https://www.starhanger.com/pages/animation-videos-info

INSTRUCTION VIDEOS:
www.starhanger.com/pages/installation-videos

PRODUCT SPECIFICATION:
www.tarhanger.com/pages/product-specifications

SALES & GENERAL QUESTIONS:
Sam Porter, P. 803-250-9608 E. sporter@starhanger.com

TECHNICAL QUESTIONS:
Charles Porter, P. 803-730-4463 E.cporter@starhanger.com

STRENGTH TESTING

In most cases the material being connected will be the point of weakness. The 360 Countertop Bolt is made of mild steel, heat treated to n-5, and holds over 2,000 lbs.

With 3/4" - 45 lb. Particle board. Board Density: Tested With Flakeboard Vesta, Internal Bond 70 Psi, Density 45 Pcf. Penetration Depth: 5/8". Bolt: 1/4-20 X 3 1/2" Allen Head Draw Bolt. Moisture Content: Maximum 10%

- **Working strength:** (pulling slot together) = 100 lbs.
- **Bolt strength:** at over 2,000 lbs. Far exceeds the strength of the particleboard slot*

Source: *Asme b1-1_2003_r2008, machine screw thread sizes*

Astm f3042-13, nonferrous hex socket, slotted headless, and square head

USEFUL ACCESSORIES:

Countertop Bolt, Ball End Allen Wrench, SKU 365

Countertop Bolt, Router Template, SKU 370

Router Bit, works with all Star Templates, SKU 915

ORDER: COUNTERTOP BOLT SKU 360