ROHS

Mark	REV.	Description	Date	Drawn	Approved
	V1.0	Intail	2019.5.21	Arlandq	

LED-1 V1.0 Camera Module

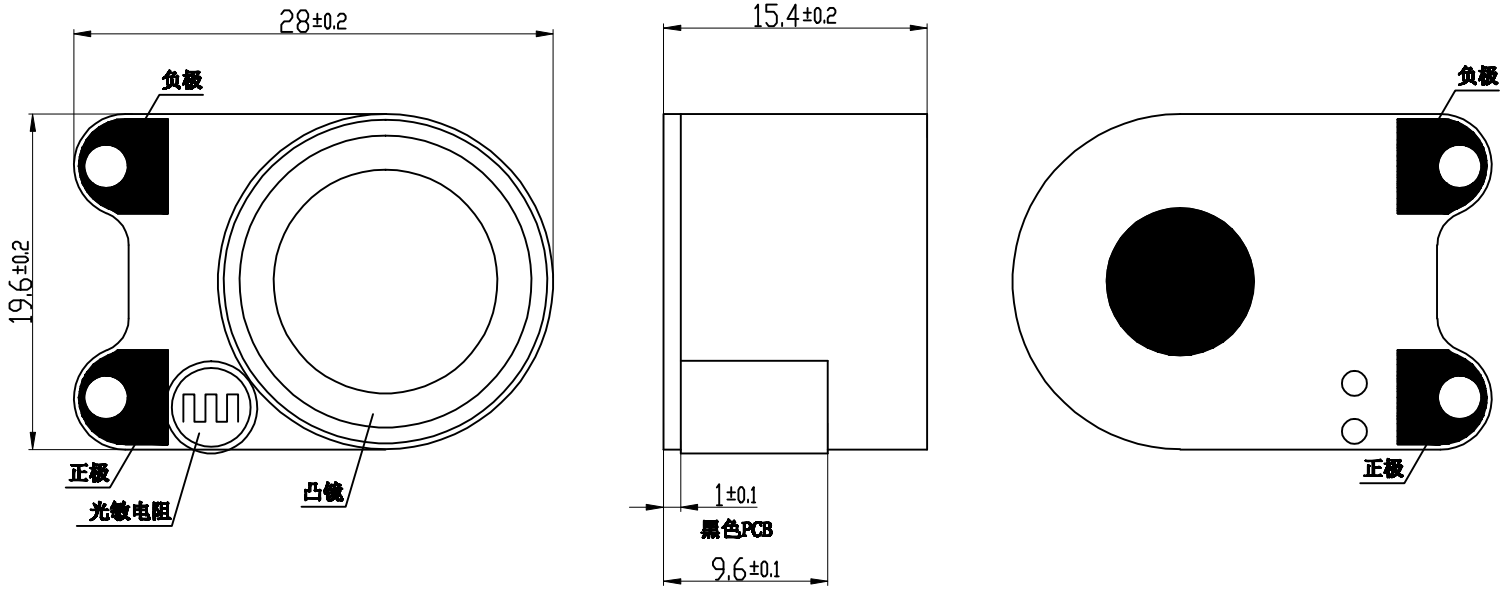

Top View　　Side View　　Bottom View

注: 1.带"☆"标示尺寸为重点尺寸,CPK ≥1.33
2.模组接口: DVP

LENS Spec		Sensor Spec		Others Spec	
LED	3W	Sensor	-		
COM.	-	Sensor size	-		
EFL	-	IO电源(DOVDD)	3.3V		
F/NO.	-	模拟电源 (AVDD)	-		
FOV	90°	CORE电源(DVDD)	-		
MAX IMA.	-	FOC. Range	-		
—	—	工作距离	10-150CM		

未注公差

x	±0.1
.x	±0.1
.xx	±0.05
.xxx	±0.005
Angle	±0.5°

CUS. Name:	-			CUS. No:	夜视摄像头鸡光红外灯
Prepared:	Arlandq	Date	2019.5.21	ODS. No:	ODS-LED-1
Checked:		Date		Scale: 1:1	Unit: MM
Approed:		Date		Third Angle	A4