Certificate of Quality

Checker:

Haier Medical and Laboratory Products Co., Ltd.
Address: Haier Industrial Park, Economic Technology Development Zone. Qingdao 266510.P.R.China
Web:www.haiermedical.com
Version:1st,2017
Dedicated code:0270501031
V13026

Haier

Pharmaceutical Refrigerator

Operation Manual

Model:
HYC-260
HYC-360
HYC-290
HYC-390
HYC-390F
HYC-610
HYC-890
HYC-940
HYC-940F

- Read the Operation Manual carefully before using your appliance.
- Keep the Operation Manual in a safe place.
- Appearance , color and layout of the door may vary.
- Translation of the original instruction.
- This product is only applicable for storage of pharmaceutical products or drugs. Not applicable for storage of blood or blood products including biological products, for example biological vaccine, agents for in vitro diagnosis and etc.

EC Declaration of Conformity

according to the Machinery Directive 2006/42/EC

For the following equipment :

Product : Pharmaceutical Refrigerator

Type Designation/Trademark: HYC-260, HYC-360, HYC-290, HYC-390, HYC-390F, HYC-610, HYC-890, HYC-940, HYC-940F — Haier

Manufactures Name : Haier Medical and Laboratory Products Co.,Ltd.

Manufactures Address : Haier Industrial Park, Economic Technology Development Zone. Qingdao 266510.P.R.China

Refer to in this declaration confirms with the following directive(s)/standards:

2006/42/EC, EN60335-1, EN60335-2-89 EN62233

Packing List

Model	HYC-260	HYC-360	HYC-290	HYC-390	HYC-390F
Operation Manual	1	1	1	1	1
Plastic bag	1	1	1	1	1
Key	2	2	2	2	2
Shelves	4	5	5	7	7
Label strip	4	5	5	7	7
Drain hole cap	1	1	1	1	1
Fixed card	16	20	/	/	/
Brackets (for rear wall distance)	2	2	2	2	2
Pad lock / Handle Kits	/	/	1/0	1/0	1/1
Power cord Kits	/	/	1	1	1

Model	HYC-610	HYC-890	HYC-940	HYC-940F	
Operation Manual	1	1	1	1	
Plastic bag	1	1	1	1	
Key	2	4	4	4	
Shelves	6	12	12	12	
Label strip	/	12	12	12	
Drain hole cap	1	/	/	/	
Fixed card	24	48	48	48	
Brackets (for rear wall distance)	/	/	/	/	
Pad lock / Handle Kits	0/1	/	/	2/2	
Power cord Kits	/	/	/	/	

Global Warming Potential

Model	Rated voltage (VAC)	Rated frequency (Hz)	CO_2 equivalent (Tonnes)
HYC-260	220~240	50/60	0.186
HYC-360	220~240	50/60	0.215
HYC-360	115	60	1.177
HYC-290	220~240	50/60	0.429
HYC-290	115	60	0.358
HYC-390	220~240	50/60	0.436
HYC-390	115	60	0.429
HYC-390F	220~240	50/60	0.436
HYC-610	220~240	50/60	0.601
HYC-610	115	60	0.501
HYC-890	220~240	50	0.358
HYC-940	220~240	50	0.472
HYC-940	220~240	60	0.615
HYC-940	115	60	0.458
HYC-940F	220~240	50	0.472

This product contains fluorinated greenhouse gases covered by the Kyoto Protocol. Do not vent into the atmosphere.

GWP=global warming potential

Refrigerant type	GWP
R134a	1430

Haier Quality,
Your trust from beginning to end.

The product is applicable to pharmacies, pharmaceutical factories, quarantine stations, health centers and hospitals, used to store pharmaceuticals, medicine and other related products which need a storage environment of 2~8℃.

Temperature Control

The unit is equipped with a computer control, digital display of temperature of 0.1℃ accuracy and a temperature range of 2℃ to 8℃.

Safety System

- Multi-fault alarm (high and low temperature alarm, low battery alarm, power failure alarm, sensor error alarm and door ajar alarm)
- Two alarm methods(Audible buzzer alarm and flashing indicator alarm)
- All independent components are safely grounded

Refrigeration System

- Refrigeration system is optimized with high quality hermetically sealed compressors and other components for a high efficiency performance.

User-friendly Design

- User-friendly design, computer control, smart and carefree, adjustment not required.
- High performance thermal insulation.
- Electric heated glass door with multiple anti-condensation technologies(except HYC-260/360).
- Automatic removal of condensate water.

Note: Technical information might be somewhat different on your refrigerator than published due to continuous improvement.

Content:

Specification

Name	Pharmaceutical Refrigerator			
Model	HYC-940			HYC-940F
Exterior Dimensions (W×D×H) (mm)	1130×755×1980			
Interior Dimensions (W×D×H) (mm)	1030×590×1425			
Effective Volume	890L			
Door	Glass door with electric heat			Solid door
Insulation	CFC-Free foamed-in-place urethane			
Compressor	High Quality Hermetically sealed compressor			
Shelves	12 Polyester coated wire shelves			
Load	≤20kg per shelf			
Refrigerating Method	Force-air cooling circulation			
Exterior / Interior	Cold-rolled steel with power coated/Cold-rolled steel with power coated			
Condenser/Evaporater	Fin tube type / Fin tube type			
Temperature Control	Microprocessor controlled			
Interior light	LED 9W			
Net Weight	227kg			207kg
Temperature Range of sensor in glycerin bottle	2℃~8℃			
Voltage	220-240V~/50Hz	220-240V~/60Hz	115V~/60Hz	220-240V~/50Hz
Rated Power/Current	850W/4.5A	770W/4.5A	850W/11A	600W/3A
Refrigerant	R134a 330g	R134a 430g	R134a 320g	R134a 330g
Noise Level(Lp)	45dB(A)			
Foaming Agent	CP/IP			
Climate Type	4			
Anti-shock Safety Classification	I			
Power connection type	Y			
Alarm system	High & low temperature alarm, sensor error alarm, power failure alarm, low battery power alarm, door ajar alarm			
Battery duration for alarm system	48 h (when the battery is fully charged)			
Rechargeable Battery	DC 12V rechargeable battery			

Note: Climate Type 4 means the temperature is +30℃,the relative humidity is 55%.Technical information may vary from the appliance that you have just purchased due to technical improvements.

Specification

Name	Pharmaceutical Refrigerator
Model	HYC-890
Exterior Dimensions (W×D×H) (mm)	1130×755×1980
Interior Dimensions (W×D×H) (mm)	1030×590×1425
Effective Volume	890L
Door	Glass door with electric heat
Insulation	CFC-Free foamed-in-place urethane
Compressor	High Quality Hermetically sealed compressor
Shelves	12 Polyester coated wire shelves
Load	≤20kg per shelf
Refrigerating Method	Force-air cooling circulation
Exterior / Interior	Cold-rolled steel with power coated/Cold-rolled steel with power coated
Condenser/Evaporater	Fin tube type / Fin tube type
Temperature Control	Microprocessor controlled
Interior light	LED 6W
Net Weight	227kg
Temperature Range of sensor in glycerin bottle	2℃~8℃
Voltage	220-240V~/50Hz
Rated Power/Current	800W/4A
Refrigerant	R134a 250g
Noise Level(Lp)	45dB(A)
Foaming Agent	CP/IP
Climate Type	4
Anti-shock Safety Classification	I
Power connection type	Y
Alarm system	High & low temperature alarm, sensor error alarm, power failure alarm, low battery power alarm, door ajar alarm
Battery duration for alarm system	48 h (when the battery is fully charged)
Rechargeable Battery	DC 12V rechargeable battery

Note: Climate Type 4 means the temperature is +30℃,the relative humidity is 55%.Technical information may vary from the appliance that you have just purchased due to technical improvements.

Safety Precautions

Dear users:

Thanks for your choice of Haier pharmaceutical refrigerator, please make sure you have carefully read and observed the contents with following signs in the manual, for better understanding of this manual and better use of this product, so as to prevent personal injuries and refrigerator damage.

Warning	Ignoring this warning may result in death or serious injury		Actions or operations which are prohibited
Caution	Ignoring this warning may result in death or serious injury,and/or damage to the refrigerator and property		Actions or operations which must be followed

Warning

- When there is a leak of flammable gas, shutoff the feed valve of the gas. Open windows for ventilation and exhaust. Do not plug in your refrigerator or unplug your refrigerator as spark in these processes can cause an explosion or fire.
- We recommend the unit be installed by a professional to avoid any electrical hazard.
- Place the refrigerator on solid and flat ground to avoid tipping the unit over to cause personal injury.
- Only connect the refrigerator unit with a dedicated power outlet specified by the nameplate of the unit. This is to avoid fire or electric shock.
- If the supply voltage is lower than 198 V or higher than 242 V, an automatic voltage regulator of at least 4,000 W should be installed with the refrigerator.
- If the power cord needs to be lengthen, the cross section area of the extension line's conductor should be at least 2 mm² and the length of the extension cord should be limited to 3 m. This is to prevent electric fire or shock.
- The power cord of the unit is equipped with a 16 A three-prone power plug. Do not remove the ground pin of the power plug under any circumstances. Make sure the plug is securely plugged into the power outlet to prevent fire.
- The power socket must be equipped with a ground wire to prevent electric shock. If the socket fails to be grounded, the ground wire must be installed before the refrigerator is plugged in.
- The refrigerator shall not conduct outdoor service. Electrical leakage or shock may be caused if wet by rainwater.
- Do not place the refrigerator in humid places or places where the unit may get splashed on by water. This is to avoid electric shock due to deterioration of insulation.
- In case the fire, do not pour water onto the refrigerator unit as a means to prevent electric shock or short circuit.

- Do not place containers of water or heavy objects on the refrigerator. Falling objects may cause personal injury and overflown water may damage the insulation to cause electric shock and fire.
- Do not ground the refrigerator through gas pipes, water supply pipes, telephone lines or lighting conductors. These types of connections can cause electric shock.
- Do not touch electric parts such as power plugs or switches with wet hands to prevent electric shock.
- When pulling the plug out of the power socket, hold the power plug instead of power cable. Pulling the cable can cause a damage and personal injury.
- Unplug the refrigerator unit if it malfunctions to avoid fire or personal injury.
- Dismantling, repairing and retrofitting a unit should only be performed by a professional to avoid personal injury.
- Disconnect the refrigerator when repairs or maintenance are performed on the refrigerator to prevent electric shock or personal injuries.
- Do not inhale airborne particles inside and near the refrigerator during routine maintenance. This is to avoid health hazard.
- To avoid any potential danger to human health or environment, the refrigerator should be used in safe regions to store toxic, harmful or radioactive particles.
- If the refrigerator is to be decommissioned, unplug the power cord to avoid electric shock, current leakage, or fire caused by aged power lines.
- If the refrigerator is left unused in area where supervision is unavailable for a long time, make sure children are not near the unit and the door cannot be completely closed and locked.
- End of life disposal of a unit should only be performed by a professional. Remove the door to avoid accidents such as suffocation.
- Do not store flammable, explosive or volatile articles inside the refrigerator and do not use flammable sprays nearby. This is to avoid an explosion or a fire.
- Do not store corrosive articles such acid or alkali in the refrigerator. These chemicals can damage internal components or electrical parts.
- Do not place packaging plastic bags within the reach of children to prevent suffocation accidents.
- Do not climb to the top of the refrigerator or place plastic bags on top of the refrigerator. This is to prevent tip over of the refrigerator, which can cause personal injury.
- Do not use any metal objects such as iron nails or wires into holes, gaps or vents for internal air circulation. This is to prevent personal injury due to contact of articles behind the holes.

Specification

Name	Pharmaceutical Refrigerator	
Model	HYC-610	
Exterior Dimensions (W×D×H) (mm)	780×840×1945	
Interior Dimensions (W×D×H) (mm)	680×640×1400	
Effective Volume	610L	
Door	Glass door with electric heat	
Insulation	CFC-Free foamed-in-place urethane	
Compressor	High Quality Hermetically sealed compressor	
Shelves	6 Polyester coated wire shelves	
Load	≤30kg per shelf	
Refrigerating Method	Force-air cooling circulation	
Exterior / Interior	Powder coated cold rolled steel/Stainless steel	
Condenser/Evaporater	Fin tube type / Fin tube type	
Temperature Control	Microprocessor controlled	
Noise Level(Lp)	43dB(A)	
Interior light	LED 3W	
Net Weight	204kg	
Temperature Range of sensor in glycerin bottle	2℃~8℃	
Voltage	220-240V~/50Hz/60Hz	115V~/60Hz
Rated Power/Current	550W/3.5A	560W/7.5A
Refrigerant	R134a 420g	R134a 350g
Foaming Agent	CP/IP	
Climate Type	4	
Anti-shock Safety Classification	I	
Power connection type	Y	
Alarm system	High & low temperature alarm, sensor erroe alarm, power failure alarm, low battery power alarm, door ajar alarm	
Battery duration for alarm system	48 h (when the battery is fully charged)	
Rechargeable Battery	DC 12V rechargeable battery	

Note: Climate Type 4 means the temperature is +30℃,the relative humidity is 55%.Technical information may vary from the appliance that you have just purchased due to technical improvements.

Specification

Name	Pharmaceutical Refrigerator				
Model	HYC-290		HYC-390		HYC-390F
Exterior Dimensions (W×D×H) (mm)	665×710×1665		665×710×1965		665×710×1965
Interior Dimensions (W×D×H) (mm)	530×555×1080		530×555×1380		530×555×1380
Effective Volume	290L		390L		390L
Door	Glass door with electric heat				Solid Door
Insulation	CFC-Free foamed-in-place urethane				
Compressor	High Quality Hermetically sealed compressor				
Shelves	5		7		7
Load	≤26kg per shelf		≤26kg per shelf		≤26kg per shelf
Refrigerating Method	Force-air cooling circulation				
Exterior / Interior	Cold-rolled steel sheet with powder coated /HIPS plate				
Condenser/Evaporater	Fin tube type / Plate type				
Temperature Control	Microprocessor controlled				
Interior light	LED 3W		LED 3W		LED 3W
Net Weight	105kg		116kg		106kg
Temperature Range of sensor in glycerin bottle	2℃~8℃		2℃~8℃		2℃~8℃
Voltage	220-240V~/50/60Hz	115V~/60Hz	220-240V~/50/60Hz	115V~/60Hz	220-240V~/50/60Hz
Rated Power/Current	340W/2.2A	460W/5.0A	380W/2.4A	500W/5.5A	300W/2.4A
Refrigerant	R134a 300g	R404a 250g	R134a 305g	R404a 300g	R134a 305g
Noise Level(Lp)	43dB(A)	47dB(A)	43dB(A)	47dB(A)	43dB(A)
Foaming Agent	CP/IP		CP/IP		CP/IP
Climate Type	4		4		4
Anti-shock Safety Classification	I		I		I
Power connection type	Y		Y		Y
Alarm system	High & low temperature alarm, sensor error alarm, power failure alarm, low battery power alarm, door ajar alarm				
Battery duration for alarm system	48 h (when the battery is fully charged)				
Rechargeable Battery	DC 12V rechargeable battery				

Note: Climate Type 4 means the temperature is +30℃,the relative humidity is 55%.Technical information may vary from the appliance that you have just purchased due to technical improvements.

Caution

- Always check the settings in the controller after restarting a unit from a power outage or shut off. Change of settings may cause damage to the products stored.
- If the power is shut off, let the unit sit for 5 minutes before it is powered up again to avoid damaging the compressor or the system.
- Wear gloves when performing maintenance to prevent personal injury as a result of sharp edges or corners.
- Hold the knob when closing the door to prevent finger pinching.
- The angle of inclination shall not be greater than 45°when handling the refrigerator.
- Be aware of the danger of tripping when working with the refrigerator to avoid managing the unit or personal injury.
- Do not use the door knob to prevent refrigerator damage or personal injury.
- Do not damage the refrigeration line.
- Do not use electrical appliances inside the food storage compartments of the appliance, unless they are of the type recommended by the manufacturer.
- Position the refrigerator to make sure the power plug is accessible.
- The appliance must be placed on a solid and flat surface, or excessive vibration and noise may be produced when the appliance in operation.
- The appliance can be used by children aged from 8 years and above and persons with reduced physical, sensory or mental capacibilities or lack of experience and knowledge if they have been given supervision or instruction concerning use of the appliance in a safe way and understand the hazards involved. Children shall not play with the appliance. Cleaning and user maintenance shall not be made by children without supervision.
- If the power supply cord is damaged, it should be replaced by a qualified technician to avoid a hazard condition.
- Keep ventilation openings, in the appliance enclosure or in the built-in structure, clear of obstruction.
- If your cabinet is to be discard, you must remove the door and leave the shelves in place. This will reduce the posibility of danger to children. And the flammable foaming needs to be disposed by professional persons.
- CP/IP foaming materials are flammable, need professional processing.

- The battery in the refrigerator may be low after the refrigerator has been in storage for a long time. Turn on the battery charge switch when the unit is powered up to allow the battery to be recharged. The battery will be in full capacity after about a week's charging.
- Before loading the refrigerators, make sure the unit is at set temperature. Do not load in more than 1/3 of the storage volume to avoid thermally overloading the unit.
- The display on the panel shows the sensor temperature located in the refrigerator. It is not necessary the same as the temperature in the center of the refrigerator. The cabinet temperature will gradually reach an equilibrium state.
- Only clean the unit with light soapy water. Never use brushes, acids, gasoline, soap powders, polishing powders or hot water to clean refrigerators as these materials may damage the interior painting and surface, parts and components. Never wide plastic parts with volatile solvents such as gasoline.
- If the unit is to be stored for a long period of time, turn off the power switch and the battery charging switch.
- To reduce the possibility of temperature fluctuation in the refrigerator, please attempt to cut down the time to open to the door to remove and load products.
- If the door is opened, the temperature of the refrigerator will warm up somewhat. That is normal. The temperature will recover to a stable condition in a short time.
- The refrigerator is designed to operate at a condition of 16 ℃ to 32 ℃ and humidity less than 85%RH (for HYC-260/360,the humidity should be less than 70%RH). Small amount of condensation can occur on the surface of the unit if the actual condition is outside of this range. The storage temperature of the unit, however, is not impacted. To reduce the condensation, please improve the ventilation and drop the ambient temperature if possible.
- Only professional people should perform maintenance work.

Meaning of crossed –out wheeled dustbin:
Do not dispose of electrical appliances as unsorted municipal waste, use separate collection facilities.Contact you local government for information regarding the collection systems available. If electrical appliances are disposed of in landfills or dumps, hazardous substances can leak into the groundwater and get into the food chain, damaging your health and well-being.When replacing old appliances with new ones, the retailer is legally obligated to take back your old appliance for disposals at least free of charge.

Specification

Name	Pharmaceutical Refrigerator		
Model	HYC-260	HYC-360	
Exterior Dimensions (W×D×H) (mm)	620×655×1720	620×655×1995	
Interior Dimensions (W×D×H) (mm)	550×460×1065	550×460×1340	
Effective Volume	260L	360L	
Door	Glass door	Glass door	
Insulation	CFC-Free foamed-in-place urethane		
Compressor	High Quality Hermetically sealed compressor		
Shelves	4 Polyester coated wire shelves	5 Polyester coated wire shelves	
Load	≤20kg per shelf	≤20kg per shelf	
Refrigerating Method	Force-air cooling circulation	Force-air cooling circulation	
Exterior / Interior	Scratch resistant painted steel / HIPS	Scratch resistant painted steel / HIPS	
Condenser/Evaporater	Wire tube type / Fin tube type	Wire tube type / Fin tube type	
Temperature Control	Microprocessor controlled	Microprocessor controlled	
Interior light	Fluorescent lamp 15W	Fluorescent lamp 15W	
Net Weight	88kg	99kg	
Temperature Range of sensor in glycerin bottle	2℃~8℃	2℃~8℃	
Voltage	220-240V~/50Hz/60Hz	220-240V~/50Hz/60Hz	115V~/60Hz
Rated Power/Current	300W/2.1A	315W/2.2A	340W/4.5A
Refrigerant	R134a 130g	R134a 150g	R404a 300g
Noise Level(Lp)	43dB(A)	43dB(A)	47dB(A)
Foaming Agent	CP/IP	CP/IP	
Climate Type	4	4	
Anti-shock Safety Classification	I	I	
Power connection type	Y	Y	
Alarm system	High & low temperature alarm, sensor error alarm, power failure alarm, low battery power alarm, door ajar alarm		
Battery duration for alarm system	48 h (when the battery is fully charged)		
Rechargeable Battery	DC 12V rechargeable battery		

Note: Climate Type 4 means the temperature is +30 ℃,the relative humidity is 55%.Technical information may vary from the appliance that you have just purchased due to technical improvements.

Circuit diagram(HYC-940/940F)

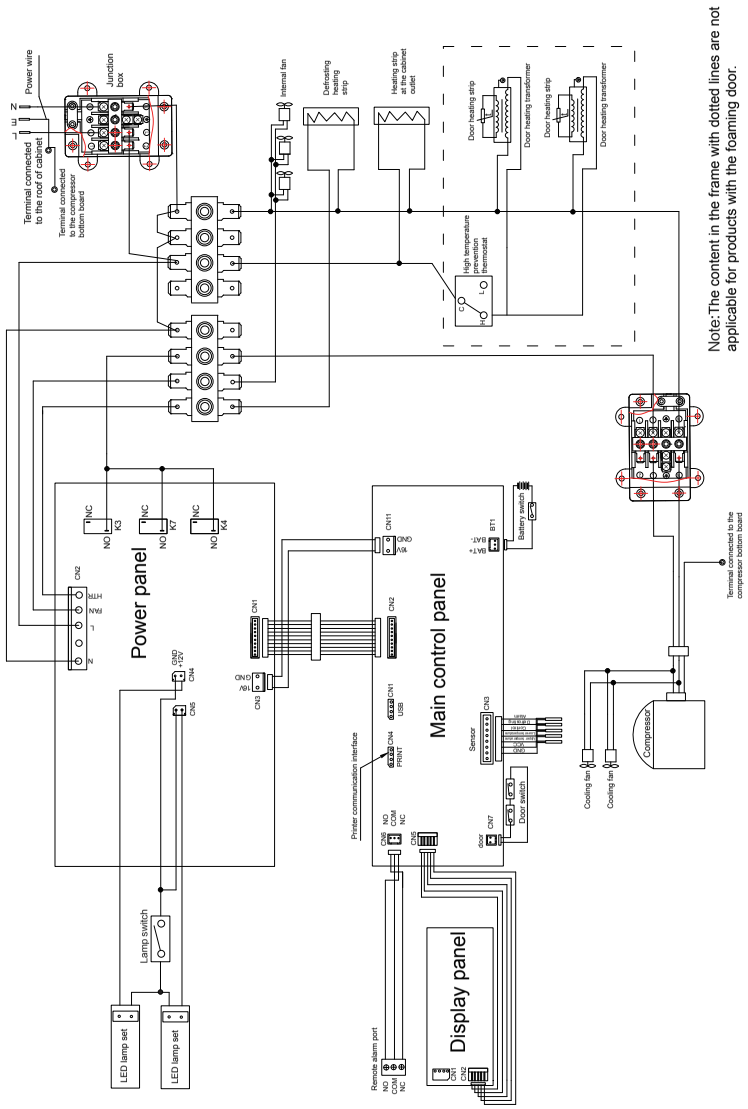

Installation environment

- Ambient temperature: 16 ℃ to 32 ℃, the range of 18 ℃ to 25 ℃ is optimal. Air conditioning system is required as necessary.
- Ambient humidity: below 85%RH（for HYC-260/360,the humidity should be less than 70%RH）.
- Avoid excessive dust.
- Avoid mechanical vibration.
- The refrigerator shall operate at an altitude lower than 2000m.
- Input voltage: no greater than ±10% of rated voltage.

Caution

- Performance of the refrigerator is degraded if the operational conditions are beyond the specifications mentioned above.
- The unit should be installed indoors. Electric leakage or shock is possible if the unit gets wet by rainwater.

Installation site

The installation site shall meet following requirements for normal operation and best performance of refrigerator:

- Do not install the refrigerator in a narrow and confined space as heat may be trapped to increase ambient temperature. Additionally, the unit should not be installed in a space where the entry door way is low to prevent an easy maneuver of the unit for maintenance and operation.
- The floor for the installation site should be solid and flat. It should also be well ventilated and free from direct sunshine.
- The power outlet for the refrigerator must be a dedicated power outlet. The power plug must be plugged in to the outlet securely.
- Do not twist or jam the power cord.
- If the power cord needs to be extended, the cross section area of the conductor in the extended line should be no less than 2 squared millimeters and no longer than 3 meter.
- Inspect the operating voltage range before operation. If the voltage supply is unstable, install a voltage stabilizer of 4000 W or greater to ensure the supply voltage is within 10% of the rated voltage supply.
- The refrigerator must be grounded reliably.
- Check the integrity of the socket ground before power up. If it is not grounded appropriately, repair the wiring before installing the unit.
- Do not ground the refrigerator through gas lines, water lines, telephone lines, or lighting rods as these devices may cause electric shock and danger.

Warning

- The power plug and outlet should be located in a place where they can be accessed easily and immediately in case of an emergency. Air vents must be free of obstruction.
- The power plug can be accessed after installation to ensure the power line can be pulled out in a timely manner in emergency cases. The air vent shall free from barriers.

Preparation before usage

1. Remove all packaging materials.

Caution

- For safety reason, the equipment of HYC-890/940/940F is situated on a wooden pallet and secured by metal brackets. Please remove the screws and place the metal brackets under the unit.（Pic.1）.
- Forklift or specialty lifting equipment should be used to remove the unit off the pallet. Forklift should reach the bottom of the wood pallet for lifting.
- The unit should not be tilted at an angle of more than 45 degree.

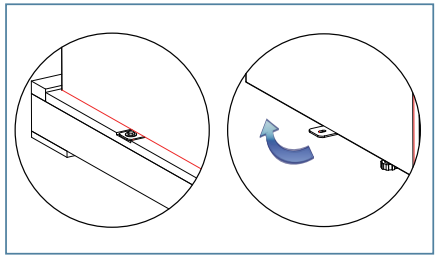

Pic.1

2. Inspect standard accessories shipped with the unit

Inspect the accessories against packing list. Should there be any discrepancy, contact the after-sale department.

3. Installation

Leave a minimum space of 10 cm around the refrigerator for ventilation and heat dissipation. (Pic.2).

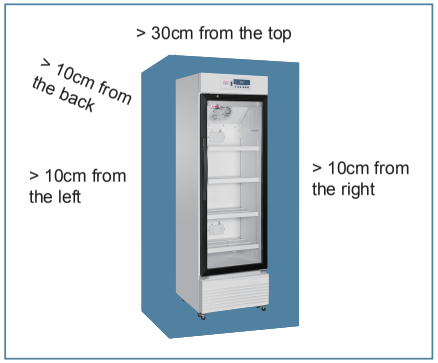

Pic.2

4. Adjust the leveling leg

Rotate the leveling legs with a wrench in clockwise to extend them out and secure them onto the ground. This is to make sure the refrigerator does not move during operation.（Pic.3）.

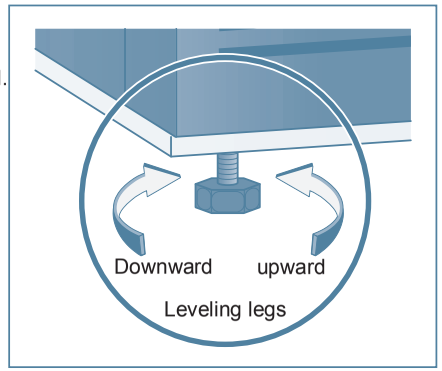

Pic.3

Circuit diagram(HYC-890)

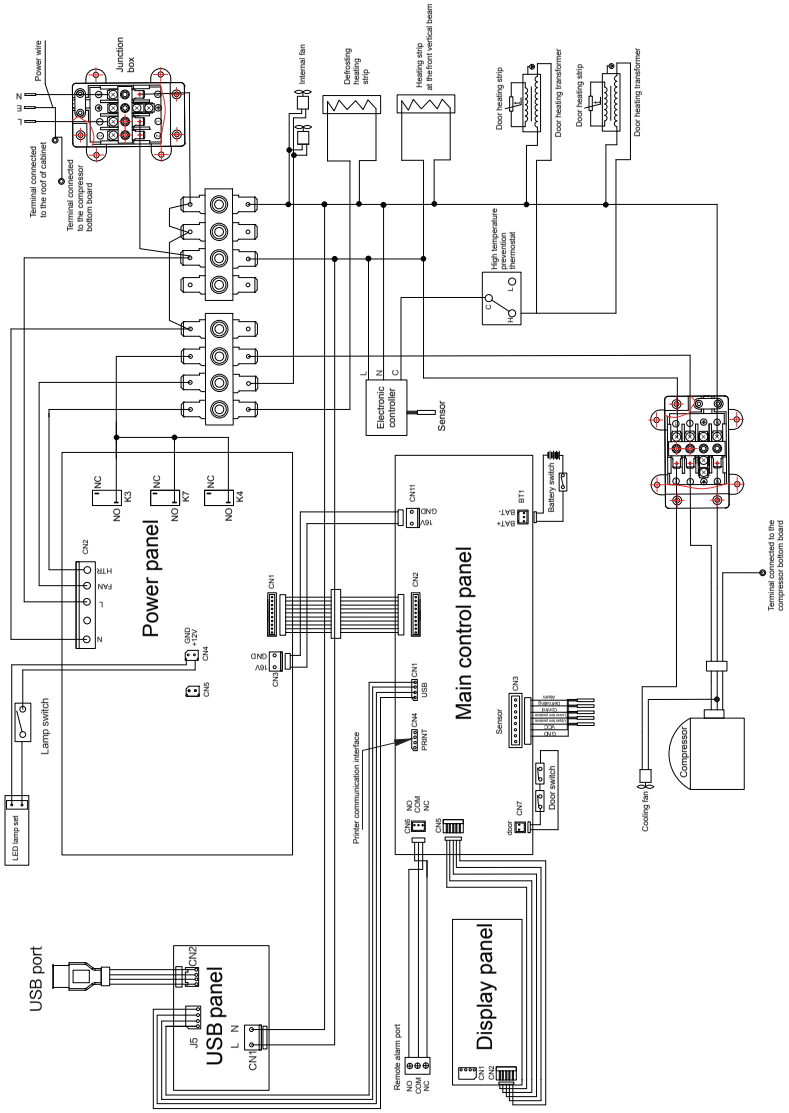

Circuit diagram（HYC-610）

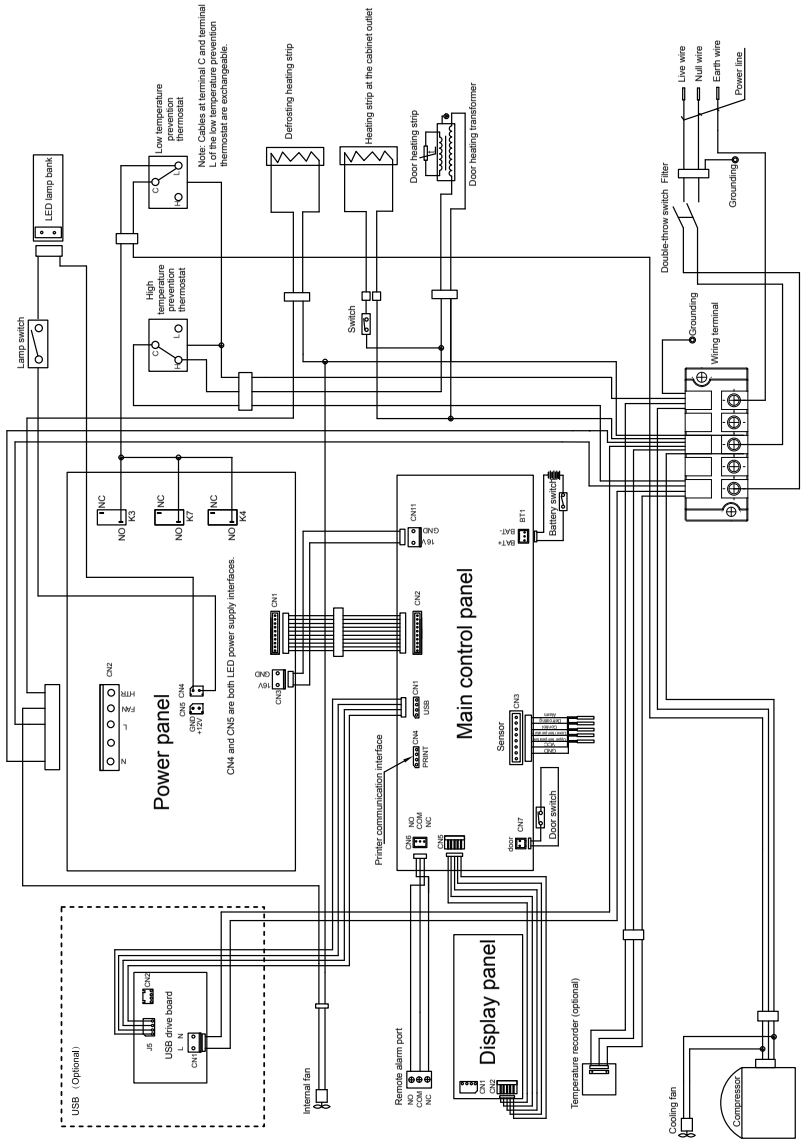

5. Standing

Do not immediately power up the refrigerator after it is installed. Let the unit stand still for 24 hours and then power it up to ensure the unit works properly.

6. Installation of Shelves and Label strip

- HYC-260/360/610/890/940/940F

  Take out the shelf, label strip and rack fastener from the refrigerator. Fix the shelf fasteners on the liner plate at the appropriate distance and height. After mounting the shelf and label strip, place them on the shelf fastener and ensure the shelf is placed firmly.See Pic. 1 (see Pic. 2 for HYC-610、HYC-890);

- HYC-290/390/390F

  After mounting the shelf and label strip, place them on the liner plate slot at the appropriate distance.

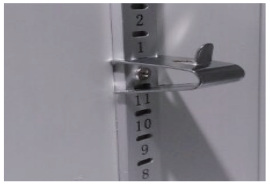

Pic.1

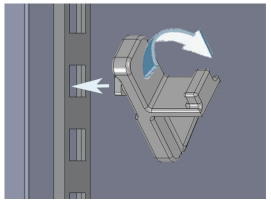

Pic.2

7. Install handle (HYC-390F/HYC-610/HYC-940F)

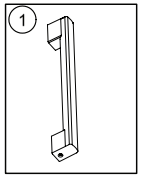

a.Place the end of handle with a hole facedown.

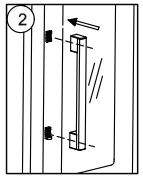

b.Align the handle with the holder on the door.

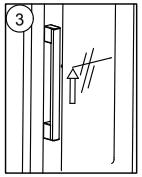

c.Raise the handle after securing the handle and holder.

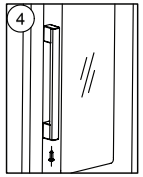

d.Use screws to fasten the handle at the bottom.

8.Back Bracket(HYC-260/360/290/390/390F)

• HYC-260/360

Install the support bolts into the mounting holes on the back of the refrigerator. (See Pic.3）

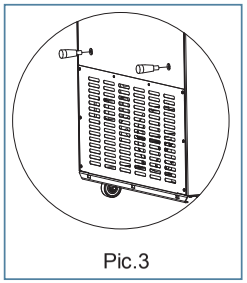

Pic.3

• HYC-290/390/390F

Remove four M5 bolts from the back of cabinet，then fix the back bracket for rear wall distance with the removed bolts.(See Pic.4）

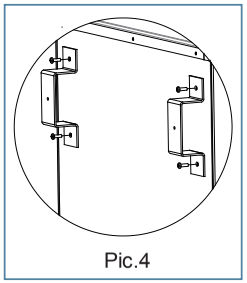

Pic.4

9. Power line bracket installation （HYC-290/390/390F）

Use two M3.5 screws to fix the power line brackets to the refrigerator. (See Pic.5)

⚠ Caution

For the power supply cable with loose prevention hook it is not configured clamp stand.

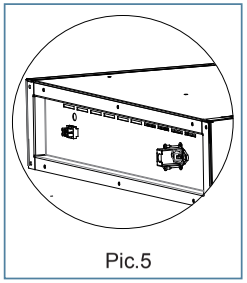

Pic.5

Circuit diagram（HYC-290/390/390F）

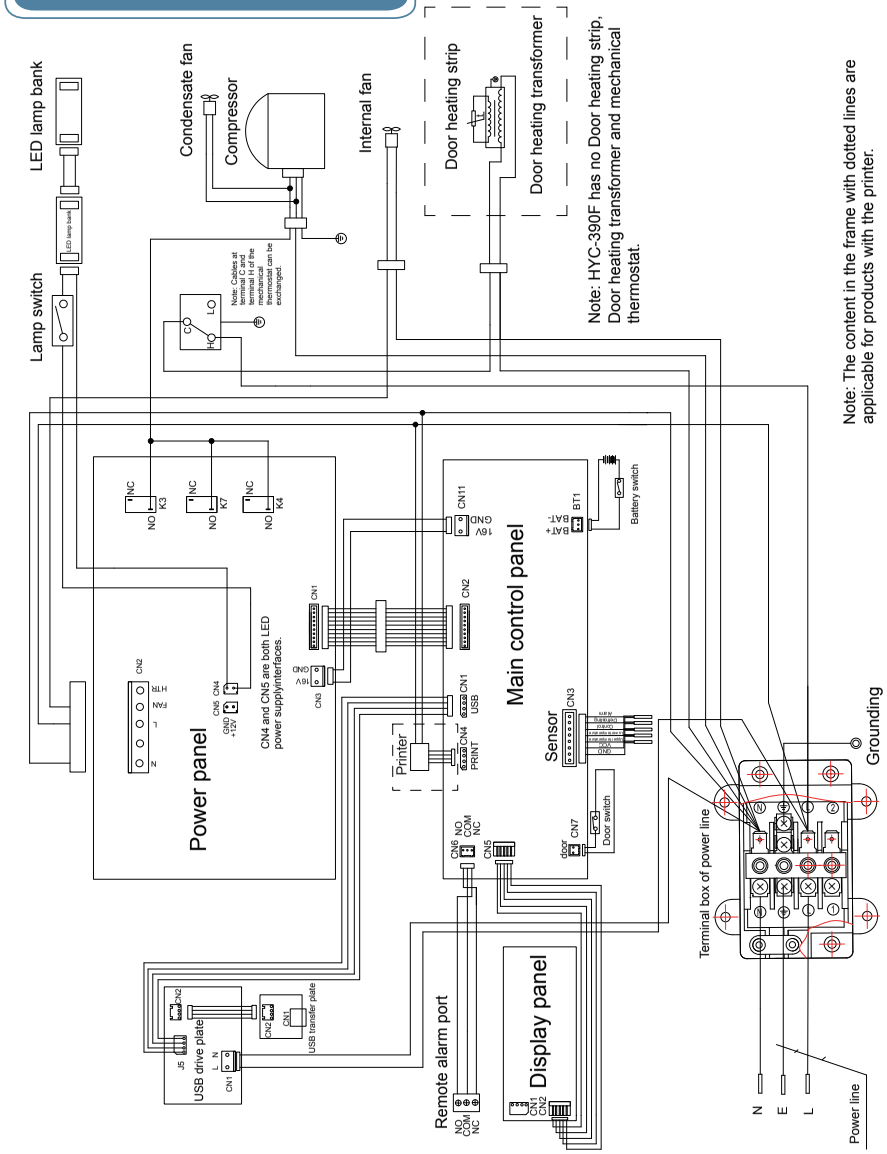

Circuit diagram（HYC-260/360）

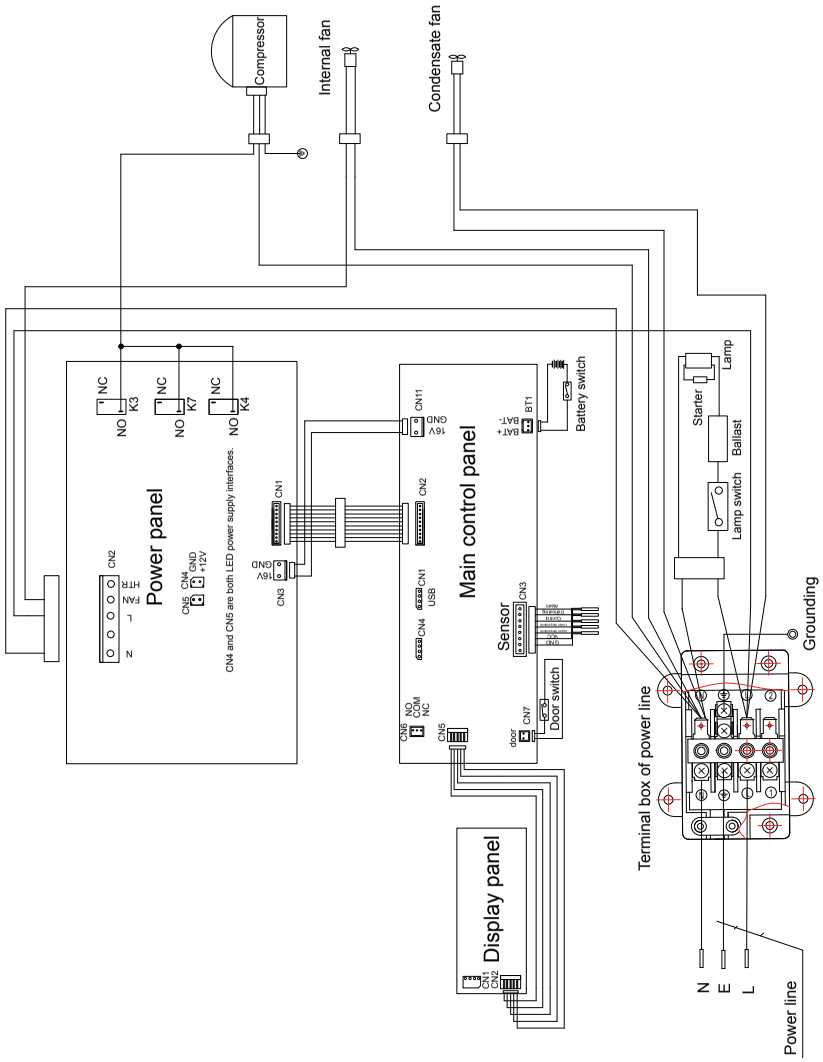

Initial Power-on

Follow the flow chart below to start the refrigerator.

While the refrigerator is empty, connect the power line to the appropriate dedicated socket and make sure the power supply in the socket matches the required voltage and frequency.

After the power is switched on, turn on the battery charging switch. The audible alarm is usually triggered. Press the buzzer to stop the alarm. The audible alarm continues to operate until the temperature of the sensor reaches 5℃±3℃.

The refrigerator has been preset to operate at 2~8℃ in the factory and it is not required to set temperature

It usually takes several hours for the refrigerator temperature to reach a stable condition. When the temperature becomes stable, inspect the actual temperature to make sure it matches the set point.

Turn on the light switch and ensure the light inside the freezer operates properly.

When the refrigerator passes all the functional inspections, load in products in batches.

- This unit should be managed a dedicated professional person. Operating conditions should be checked and recorded using appropriate methods. When the refrigerator temperature is out of specification, take proper actions to protect the stored samples. No products should be stored in the unit unless the unit operates without issues.
- The refrigerator is a pharmaceutical refrigerator designed to operate within 2℃ to 8 ℃. Make sur to store only products that fit this temperature range.
- Due to the refrigeration effect, the displayed temperature may be somewhat different from actual temperature and humidity. This is a normal process.
- Do not place any article in the space between liner bottom and underbed shelf of the refrigerator to avoid blocking of air duct which may affect homogeneity of temperature inside.

- Warm products should only be loaded into the units in batches to reduce the load to the cooling system. Overloading the system can cause the refrigerator temperature to rise and the compressor to work under undesirable stress, which can shorten the life of the system.
- Do not damage the refrigeration lines.
- Do not use an electrical apparatus in the refrigerator without proper approval.

Operation after Power Outage

The control parameters are stored in the control system in the refrigerator even there is a power outage. When the power recovers after the outage, the refrigerator continues to operate in accordance to the set parameters before the power outage.

Warning

- If the unit is shut off, allow a 5 minutes hiatus before powering it up again.
- If the unit is to be shut down for a long time, be sure to turn off the power switch, and the battery switch. Unplug the unit from the power outlet. This is to a hazardous condition due to aging power lines.
- If the refrigerator is decommissioned and left unattended, make sure children cannot get close to the refrigerator and the door cannot be closed completely.

FAQ

If you have any questions about the operation of the refrigerator, please refer to the table frequent asked questions as follows. Call Haier technical support if you still have questions. Do not attempt to maintain or dismantle the unit by yourselves.

Fault	Troubleshooting
The refrigerator does not work	Inspect the power supply to make sure it meets the requirement.
	Inspect the connection between the power plug and the socket.
	Check the power cord for any obvious damage.
	Whether the voltage is too low
The refrigeration effect is weak and temperature exceeds upper limit.	The unit is loaded with too much warm sample and product.
	There is a lack of space between stored samples.
	There might be a direct sunlight or other heat radiation energy on the refrigerator.
	The door is opened too frequently.
	Ambient temperature is too high.
	Air duct is blocked.
Unit seems to emit too much noise.	Check the installation of the unit to make sure the unit does sit on a solid floor without vibration.
	Part of the refrigerator leans against a wall.
	As a reference, the published sound data is obtained at specific laboratory condition. It is normal that the actual sound level in the field differs due to subtle installation and operation conditions.
Alarm light flashes and alarm buzzer sounds	Warm products have been placed into the unit recently and the refrigerator has not stabilized yet at 2℃to 6 ℃. The alarm condition will be automatically corrected once the temperature reaches the set value.
	The door is not closed properly.
	The unit lost power recently and it is in the process of cooling down.
	Ambient temperature might exceed the designed range.

Purchasing backup battery for temperature recorder

You can purchase a high quality battery from a store for the same size and voltage(9V). You may also call Haier to purchase a high quality replacement battery. The lead time to deliver the battery is 15 days after receiving the payment. Please call Haier for details.

Battery maintenance

When the refrigerator works continuously, please test battery charge level every 15 days (please refer to “Alarm Test” on Page 27 for test method). In case of low battery charge level, make sure that battery switch is on and battery is charged. When the battery has been charged for consecutive 7 days, please retest battery charge level. In normal conditions, battery charge should be full. If low battery charge level remains, it is recommended to replace the rechargeable battery.The battery of power failure alarm is a consumable item with 3-year service life. If it has been used for more than 3 years, power failure alarm may not act when alarm conditions occur. It is recommended to replace the battery earlier. Please contact a Haier after-sales service technician for battery replacement.

Rechargeable battery recycling

The refrigerator has a built-in rechargeable battery. The battery is recyclable; when its service life expires, please ask a local relevant battery recycling organization for check or discard it properly.

a.Battery location

The built-in battery of the refrigerator-freezer is used for power failure alarm and located in the electrical compartment.et.

⚠ Caution

- There are high-voltage electrical components in the electrical compartment.
- To avoid electric shock, the cover of the electrical cabinet must be opened by a qualified technician.

b.Battery removal

1) Unplug the unit from the power outlet.
2) Remove the screws on the cover with a screw driver.
3) Unplug the battery’s connecting plugs.
4) Remove the battery’s holding clip and remove the battery.
5) Recycle or dispose of the used battery as required.

Prohibition

When replacing the battery, make sure that brown wire is connected to the battery's positive pole and blue wire to the battery's negative pole. Do not misconnect; otherwise the charging circuit of computer board would be burned out easily and thus the battery cannot be charged.

Component Names

HYC-260/360

HYC-290/390

Component Cleaning

Warning

- To avoid electric shock or personnel injuries, make sure to power off the refrigerator before any repair work or maintenance is performed.
- Make sure no drug or aerosol around the refrigerator is inhaled during maintenance, otherwise your health will be threatened.

Refrigerator cleaning

- The refrigerator should be cleaned once a month to keep the appearance new and reduce the chance for gem formation.
- Use a damp cloth to clean off dust on the refrigerator. If necessary, use light detergent water to wipe off the unit if necessary. Then use a dry cloth to wipe it again.
- Do not dump water directly onto the interior of the unit to avoid damage to electrical systems.
- Compressor and other mechanical parts are hermetically sealed. They don't need lubrication.

Lamp replacement

(1) HYC-260/360 is equipped with a fluorescent lamp on the upper front part of the refrigerator. When you change the tube, please pay attention:

- Unplug the power cord.
- Remove the lamp cover.
- Remove the tube.
- Replace the original florescent lamp with a new lamp.
- Switch on the power.

Caution

- Replacement lamp must have the same specification as the original one.
- If the starter is defective, remove the old starter and install a new starter.

(2)HYC-290/390/390F/610/890/940/940F is equipped with a LED lamp. To replace the lamp, please contact the service department.

Purchasing chart paper for temperature chart recorder

The chart recorder papers are imported chart papers designed for the recorder. The papers that are supplied with the unit usually last about half of a year. When you are running short of the chart paper, please contact Haier to purchase more. The lead time to deliver the charts is 15 days after receiving the payment . Please call Haier for details.

Automatic Alarm Recovery

This series of refrigerator is has an automatic alarm recovery feature.

- When the system is in the alarm mode, you can press the “Silence” on the display panel to cancel the alarm. (The remote alarm will not be stopped.)
- If the alarm condition still exists, the buzzer will return to the alarm mode again automatically 20 minutes later.

⚠ Caution HYC-260/360 series does not have the remote alarm function.

Remote Alarm Terminals

HYC-290/390/390F/610/890/940/940F has remote alarm terminals:

- Remote alarm terminals are installed on the refrigerator and the alarm signal behind the compartment is output by the terminals. The bearing capacity of the terminals is DC 30V, 2A.
- Terminal output:
  Remote alarm terminals include NO, NC and COM.
  The user can choose “NO” or “NC” if needed.

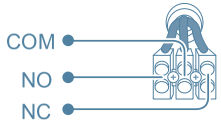

HYC-390F

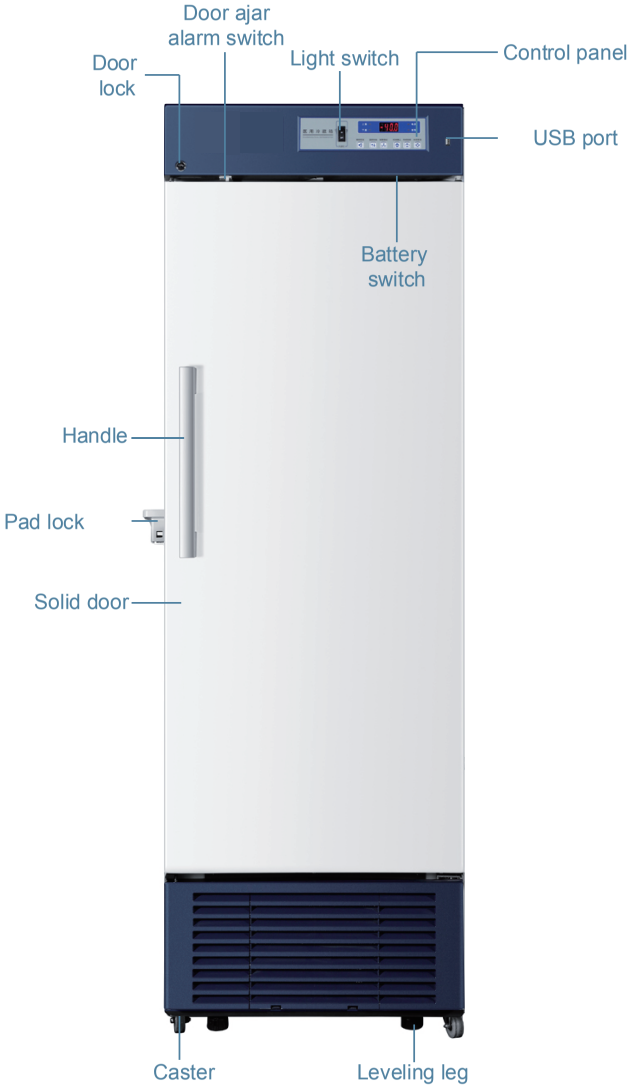

HYC-610

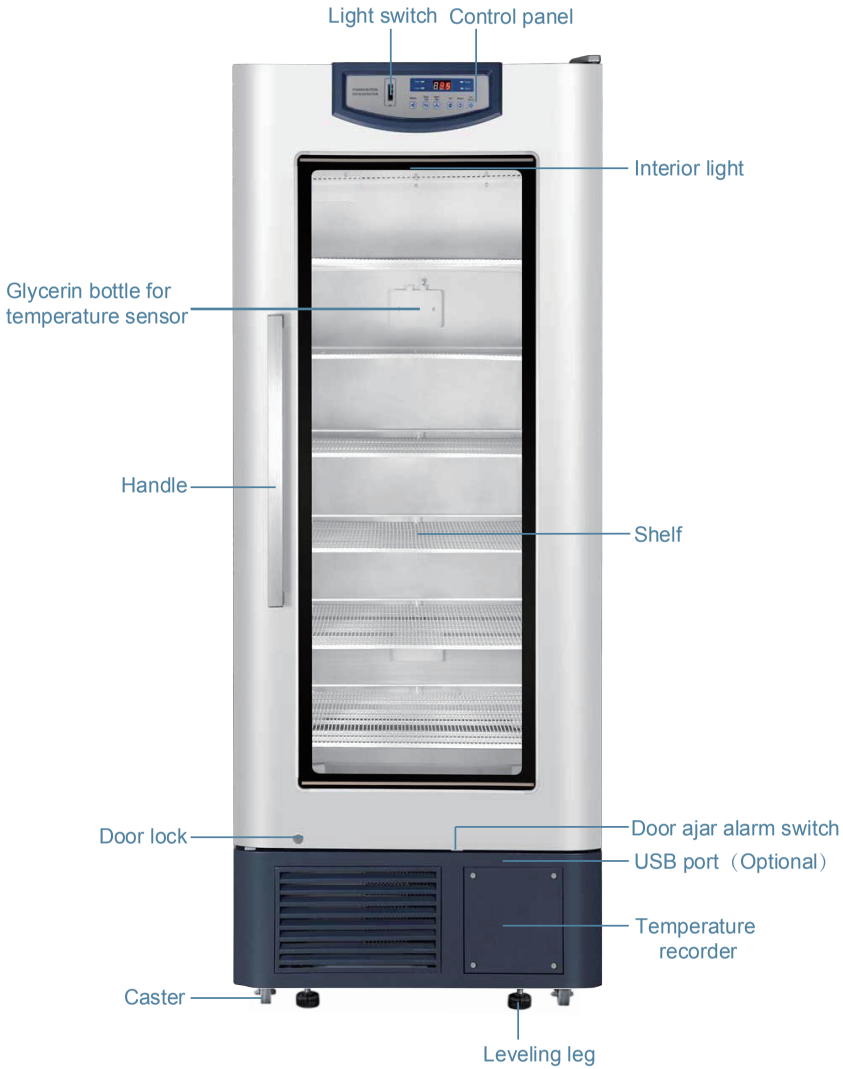

Alarm

Alarm or Safety	Phenomenon	Alarm Indication	Buzzing Alarm
High temperature	If upper temperature sensor or lower temperature sensor perceives temperature of the refrigerator ≥8℃	Alarm light flashes	Impulsive sound alarm
Low temperature	If upper temperature sensor or lower temperature sensor perceives temperature of the refrigerator < 2℃	Alarm light flashes	Impulsive sound alarm
Outage	Outage of the refrigerator	Temperature Display area displays inside temperature for 60s and stop displaying for 60s, then repeat	Impulsive sound alarm within 48h outage
Door ajar	Outer door ajar or open	Alarm light flashes after 10 min delay	Give impulsive sound alarm after 10 min delay
Sensor abnormities	Open circuit or short circuit of the upper temperature sensor	Alarm light flashes, temperature display area displays E1	Impulsive sound alarm
	Open circuit or short circuit of the lower temperature sensor	Alarm light flashes, temperature display area displays E2	Impulsive sound alarm
	Open circuit or short circuit of the control sensor	Alarm light flashes, temperature display area displays E3	Impulsive sound alarm
	Open circuit or short circuit of the defrosting sensor	Alarm light flashes, temperature display area displays E4	Impulsive sound alarm

⚠ Caution

- If alarm condition is not corrected within 20 minutes, buzzer and remote control contact will restart.
- IF there is a power outage, a fully charged emergency battery can keep the alarm function in working condition for 48 hours.
- Once the unit starts up and restarts after a long time in storage, charge the battery for to keep the alarm function for 48 hours.. Even if the battery discharges, remote alarm contact shall keep in working condition.
- Press "Alarm Test " key. For each press, the buzzer goes off thrice with frequency as 1Hz continuously. Meanwhile, the alarm indicator light flashes thrice and the remote alarm relay is disconnected after pull-in thrice, which means the alarm system functions normally.

Caution

1. If control buttons are not touched in 60 seconds, all changes of parameters will not become effective. The previous settings are restored.
2. If the unit is powered off before the parameters are saved, the control parameters in the RAM will be lost. The unit will retain the previous set up once the power recovers.
3. Humidity measuring range: 20 ~ 90% RH; humidity measurement accuracy: ± 5% RH (40% RH ~ 80% RH); ± 8% RH (Others)

HYC-890

HYC-940

shows“1P” once again. Users can set 1P-5P again. After the setting, press the “Cal ” for 5s, and all s ettings will be automatically saved. And then the display area of inner temperature shows the inner temperature normally.

Note: during the said 1P-5P setting process, parameters can be specifically regulated via the “Sensor ” (increase) or “Cal Cancel” (decrease) keys. For example,in the case that current display area of inner temperature shows 1P (year), and the year (1P)and month (2P) need not regulation, press the “Cal Cancel” to choose the date (3P) so as to reset the date directly. Then press the “Cal ” and the display area of inner temperature blinks the date. Press the “Sensor ”(decrease) or “Cal Cancel” (increase) to regulate the current date. And then press the “Cal ” to save it. After that, the display area of inner temperature shows the hour (4P). If hour setting is necessary, press the “Cal ” to regulate. Otherwise press “Cal Cancel” (increase) to enter the minute (5P) setting.Upon the finish of setting, press the “Cal ” for 5s to save it and exit. Then the display area of inner temperature shows the inner temperature normally. During the said 1P-5P setting process, after setting any parameter, if other parameters do not need to set, press the“Cal ” for 5s to save it and exit.

⚠ Caution

Please checking the time before use, if the time is not right, follow the upper method to adjust the time 。

Anti-condensation controller（HYC-890）

Anti-condensation controller intelligently operates the heating on the door and cabinet parameter to prevent condensate from forming, using the environment temperature and the humidity as input parameters. Therefore, in environment with high humidity, the heater in the door glass and parameter of the frame will be powered up.

• Display description

The left panel window displays the temperature and humidity, and keypad is on the right side. Display description is as follows:

It is 2-1/2 digital display, as shown in the right picture:

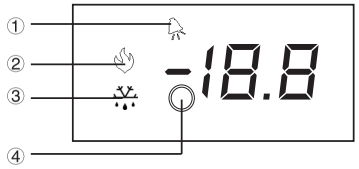

① Alarm symbol: displayed when alarming;

② Heating symbol: displayed during heating operation;

③ Defrost symbol: (not used);

④ Humidity symbol: displayed when checking humidity;

Humidity display range: 20 ~ 90% RH;

• Modify control humidity

Three buttons “SET” ,“▲”,“▼” on the instrument are used for controller operation.

Press button “SET” for 1 second, display shows the current set operating point;

Use “▲” or “▼” to increase or decrease the set humidity value, until it reaches the desired value;

Press button “SET” for 5 seconds to confirm and exit setup.

USB Function

• Functions of USB interface

The computer has a USB function. Test data can be exported via the USB port. The computer can automatically collect and store the test data within the recent 10 years. It collects data every other 6 minutes and stores them automatically. The latest data will automatically replace the earliest data when the data storage is full.With a USB port plugged in, the computer will automatically identify it and start to export data to the USB port.In the data exporting process, if you press “ Cal ” , the screen will blink “ USb” , which indicates the data are now exporting and not finished yet. After blinking 5s, it exits and displays the actual temperature in the case.If the displays “ ALL” stably, the data export is finished. It exits 5s later can displays the actual temperature in the case.The USB port can be removed at this point. The exported data are in the following formats:

序号/No.	时间/Time	设定温度/Setting Temp.	箱内温度/Inner Temp.
0	20130425	5	5.6
1	20130425	5	5
2	20130425	5	4.9
...	...	...	...

• Time setting of USB interface data recording (time system current setting):

Press the “Cal” for 10s and the display area of inner temperature shows “1P” stably. Press the “Cal ”, and the display area of inner temperature blinks the year. Press the “Sensor ” (decrease) or “Cal Cancel” (increase) to choose the year. It displays 10 to 99 recurrently. For example, to set 2013, choose 13 and press the “Cal ” to save it. And then the display area of inner temperature shows "2P" stably. Press the “Cal”, and the display area of inner temperature blinks the month . Press the “Sensor ” (decrease) or “Cal Cancel” (increase) to choose the month. It displays 01 to 12 recurrently. When the current month comes out, press the “Cal ” to save it. And then the display area of inner temperature shows “3P” stably. Press the “Cal ”, and the display area of inner temperature blinks the date . Press the“Sensor ” (decrease) or “Cal Cancel” (increase) to choose the date. It displays 01 to 31 recurrently. When the current local date comes out, press the “Cal ” to save it. After that, the display area of inner temperature shows “4P” stably. Press the “Cal ”, and the display area of inner temperature blinks the hour.Press the “Sensor ” (decrease) or “Cal Cancel” (increase) to choose the hour. It displays 00 to 23 recurrently. When the current local hour comes out, press the “ Cal ” to save it. After that, the display area of inner temperature shows “5P” stably. Press the “ Cal ”, and the display area of inner temperature blinks the minute. Press the “Sensor ”(decrease) or “Cal Cancel” (increase) to choose the minute. It displays 00 to 59 recurrently. When the current local minute comes out, press the “Cal ” to save it. After that, the display area of inner temperature

HYC-940F

Control Panel

HYC-260/360/290/390/390F/890/940/940F

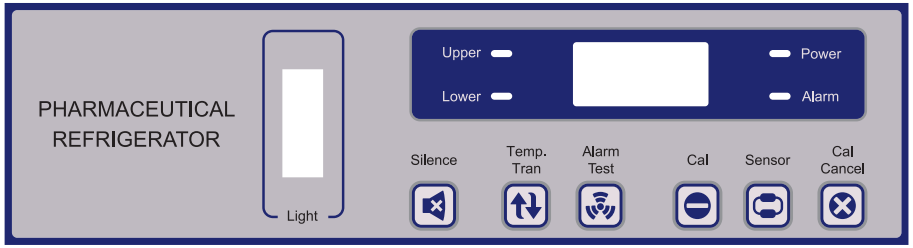

HYC-610

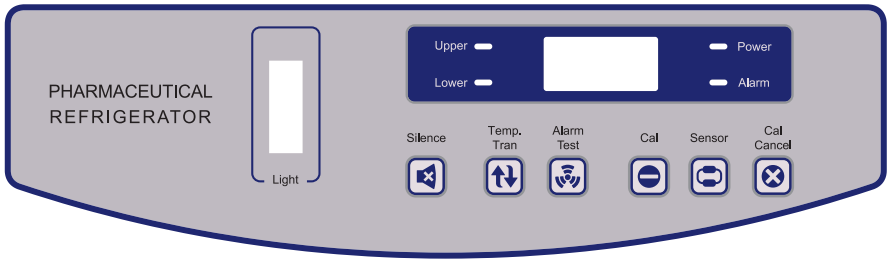

- Calibration of Recorder

The temperature recorder has been accurately adjusted before leaving the factory even if the power supply is interrupted. If there is a need to be adjusted, perform the following procedures.

1. Let the unit run for at least 2 additional hours after it reaches stable condition,
2. Place a standard thermocouple in the temperature solution bottle filled with 100 ml 10% glycerol solution. Place the sensor of the temperature recorder into the sensor bottle as well.
3. Place the sensor bottle in the refrigerator for at least 4 hours. Compare the thermocouple reading and the recorder reading. If there is a discrepancy, press the adjustment button on the left (1#) or on the right (2#) of the panel to adjust the temperature value of the recorder so that recorder reading matches the reading of the thermocouple.

Note: The recorder pen will start moving 5 seconds after the button is left out.

Caution

- The recorder has been calibrated before leaving the factory. Do not make adjustment except in special circumstances.
- The recorder is optional for HYC-610 only, not available for others.

- Maintenance and replacement of the recorder's standby battery

When the recorder's LED light blinks green, check the recorder performance as follows.

1) Remove the standby battery. If the LED light is off and the recorder stops working, the main power supply of the recorder fails. Check the main power supply for connection and any other issues. When the main power is available and the recorder starts working properly, Install the standby power supply. If the LED light stops blinking, it means the standby battery is in good condition. If the LED light continues to blink, it indicates the standby battery is low in power and it should be replaced. The green LED light will stay on and the does not blink any more.

2) Remove standby power. If the LED light continues blinking and the recorder works properly, it means the main power supply is in good condition and the standby battery is low and should be replaced.

- Replace recorder paper

Please follow the steps below for the replacement of recording paper:

1. Find the pressing button (3#) at the top left corner in the front of the recorder panel;
2. Press and hold the button (3#) for about 1 second till the recording pen begins to move toward the left of the paper;
3. After the recording pen completely moves outside the recording paper, loosen the central bolt and remove the old recording paper. When replacing a new recording paper, carefully align the timeline on the paper to the time slot on the panel (there is a small indentation at the left of the panel);
4. Retighten the central bolt, press and hold the button 3# for about 1 second to make the recording pen reset and start to record temperature;
5. Examine whether the recording pen is easy to use on the paper; if it is not easy to use, adjust the crossbeam of the recording pen to make the nib contact with the recording paper. (Note: Do not damage the nib and crossbeam. If it is difficult to be adjusted, use a screwdriver to dismount the crossbeam. After bending the crossbeam with a little strength, install back the crossbeam and repeat the above operations);
6. Ensure the accuracy of the recorder. Calibrate the preciseness of the recording pen after each replacement of paper. Methods are set as follows: Press and hold the button (3#) till the recording pen leaves the recording paper; then repress and hold the button (3#) till the pen get back to the recording paper. At the moment, the pen will pause at the outermost temperature scale of the recording paper (such a scale may not be marked with temperature value, but it is the outermost scale). If the pen does not pause at the above location, you may utilize arrow key of 1# or 2# to adjust the location of the pen within 5 seconds to make the nib aligning to the outermost scale. Repeat step 6 if you do not complete the adjustment of the location of pen within 5 seconds.

Temperature display

This refrigerator has been set capable of reaching appropriate temperature (2~8℃) automatically before delivery.

Display Temperature ● Light on ○ Light off

	Operation	Key Operation	Display	Display Mode
1	Plug in, switch on power		Average temperature of monitoring bottle ● up ● low	Average temperature
2	Press Display Temperature key		Temperature of upper monitoring bottle ● up ○ low	Temperature of upper monitoring bottle
3	Press Display Temperature key		Temperature of lower monitoring bottle ○ up ● low	Temperature of lower monitoring bottle
4	Press Display Temperature key		Average temperature of monitoring bottle ● up ● low	Average temperature
5	Repeat operation from 2			

⚠ Caution

The displayed temperatures indicate upper and lower temperatures of the refrigerator perceived by the sensor in glycerin bottle. It is not always of 5℃. Temperature sensor indicates average temperature inside the refrigerator.

TEMP. SET

If you want to reset the temperature, for example, 5℃ is set originally and you want to change the temperature to 5.5℃, please operate according to the following steps:

TEMP. SET

	Key Operation	Display
1		The temperature in the refrigerator displays.
2	Press both “Sensor” and “Cal Cancel” for 5s at the same time.	The original temperature set value 5℃ appears and flickers.(Please follow the following steps in 5s since the value flickers. Otherwise, the display panel will return to the temperature in the refrigerator)
3	Click “Cal Cancel” (0.1℃ higher/time) or “Sensor” (0.1℃ lower /time)	The original temperature set value 5℃ changes accordingly, until the temperature displayed on the display panel is 5.5℃.
4	After the demanded temperature 5.5℃ is set, stop the operation.	The temperature value 5.5℃ stops flickering after being displayed and flickering for 5s and then is saved in the system. After successful setting, the display panel will display the temperature in the refrigerator again.

Defrost Cycle

The refrigerator has two automatic defrost cycles.

1) Cycle defrost

To maintain a constant temperature inside the refrigerator, the refrigeration system cycles on and off according to the temperature demand. When the refrigeration compressor cycles off, a small electric heater is energized to thaw the frost off the evaporator surface. The function does not have an obvious impact to the chamber temperature.

2) Forced defrost cycle（HYC-260/360/290/390/390F only have this funtion)

When the environmental humidity is too high or the products loaded into the refrigerator emit much moisure, cycle defrost will not be sufficient to remove all frost and ice accumulated on the evaporator surface. The equipment will start the forced defrost cycle. Once the frost is thawed, the refrigerator will resume normal operation.

Temperature Recorder (optional)

Chamber temperature recorder with 6 inch standard panel is optional for HYC-610 to record chamber temperature change.

- Installation and operation

To operate and use the recorder correctly, please follow the steps below:

1. Open the recorder door to see the recorder;
2. Switch on the 9V DC battery on top right corner of the recorder, the battery is standby power;
3. Check the recording paper. If it is necessary to replace the paper, please follow the operation steps in P24;
4. Take down plastic cap of recording pen and close the recorder door.

⚠ Caution The recorder will not work until the chamber temperature reaches record range of the recorder.

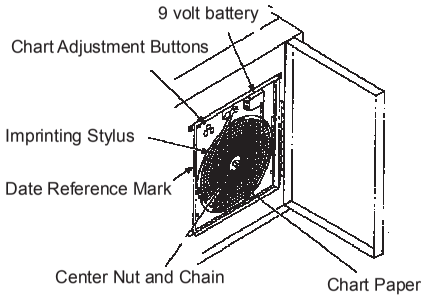

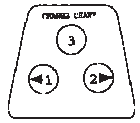

Chart Adjustment Buttons

- Power supply

When the storage box operates, the recorder normally use AC supply. If the AC power supply fails, LED indicator light on the recorder will blink and give alarm to indicate abnormal power supply. The recorder continues to record chamber temperature through standby battery supply. Each standby battery supply can sustain power for nearly 30h (Note: The battery shall be replaced timely when the battery is low to avoid corrosion of battery button caused by delayed replacement. To save battery, please disconnect battery button when the storage box is not used. During normal use, please install standby battery to ensure normal recording in case of power failure). LED indicator light of the recorder blinks continuously until main power supply (AC) is switched on and its stand-by power battery is replaced. When the standby battery is low, LED indicator light of the recorder blinks to indicate that the battery shall be replaced.