SPECIFICATION

LUCI

Model: **LUCI INOX DIVERTER MIXER**

Code: LV.3000BN Brushed Nickel
LV.3000MB Matte Black
LV.3000GM Gun Metal
LV.3000BB Brushed Brass
LV.3000BRZ Bronze

Features: Lead Free
304 Stainless Steel
35mm Ceramic Cartridge
150 - 500pka working Pressure
Suitable for High/Mains Pressure Only

304 Stainless Lead Free

LEADFREE LEADFREE LEADFREE LEADFREE LEADFREE LEADFREE LEADFREE LEADFREE LEADFREE LEADFREE

ENDURANCE + QUALITY + RELIABILITY

Constructed from the highest grade of corrosion resistant stainless steel giving you the confidence and peace of mind that health and safety comes first when it comes to water experiences. Brass fittings and faucets with long hours of sitting water is a catalyst for lead leaching, producing high levels of harmful toxins. Verotti Lead Free Tapware is committed to delivering health and wellbeing as it's highest priority.

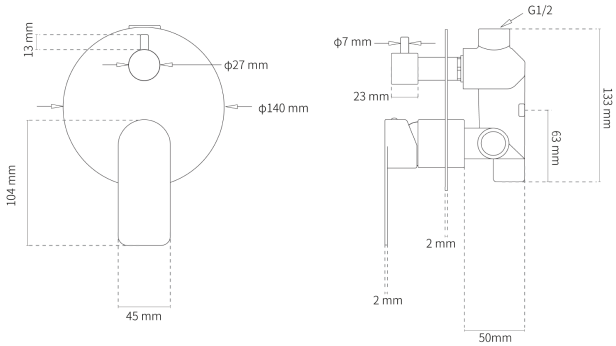

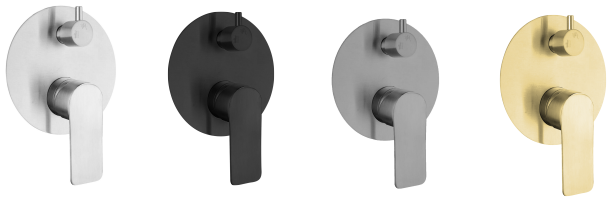

WaterMark

verotti Bathroom Culture

Information provided represents the actual product available at the time 01/01/2023
The design and specification are subject to change without notice.
Dimensions are approximate.

www.verotti.com | T.1300 837 688 | customercare@verotti.com