SPECIFICATION

CITY LIFE

Model: **CITY LIFE INOX FREESTANDING BATH FILLER**

Code:

CL.7000BN	Brushed Nickel
CL.7000MB	Matte Black
CL.7000GM	Gun Metal
CL.7000BB	Brushed Brass
CL.7000BRZ	Brushed Bronze

Features:
- Lead Free
- 304 Stainless Steel
- 35mm Ceramic Cartridge
- 150 - 500pka working Pressure
- Suitable for High/Mains Pressure Only

304 Stainless Lead Free

LEADFREE LEADFREE LEADFREE LEADFREE LEADFREE LEADFREE LEADFREE LEADFREE

ENDURANCE + QUALITY + RELIABILITY

Constructed from the highest grade of corrosion resistant stainless steel giving you the confidence and peace of mind that health and safety comes first when it comes to water experiences. Brass fittings and faucets with long hours of sitting water is a catalyst for lead leaching, producing high levels of harmful toxins. Verotti Lead Free Tapware is committed to delivering health and wellbeing as it's highest priority.

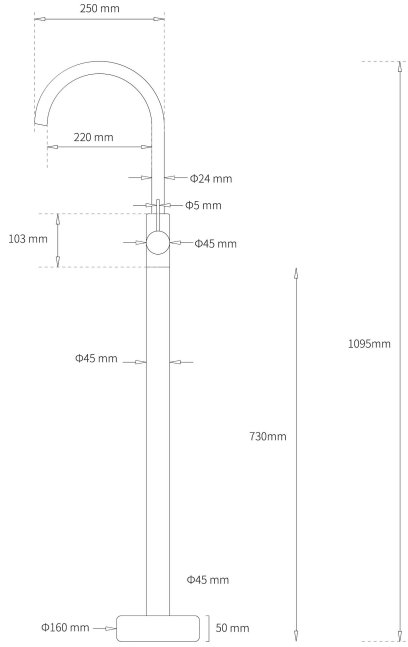

WaterMark

verotti Bathroom Culture

Information provided represents the actual product available at the time 01/01/2021.
The design and specification are subject to change without notice.
Dimensions are approximate.