SPECIFICATION

CITY LIFE

Model: **CITY LIFE INOX SINK MIXER**

Code:
- CL.6000BN Brushed Nickel
- CL.6000MB Matte Black
- CL.6000GM Gun Metal
- CL.6000BB Brushed Brass
- CL.6000BRZ Brushed Bronze

Features:
- Lead Free
- 304 Stainless Steel
- 35mm Ceramic Cartridge
- 150 - 500pka working Pressure
- Suitable for High/Mains Pressure Only
- Approx. 4.5L/min Water Flow Rate
- Wels 6 Star

304 Stainless Lead Free

LEADFREE LEADFREE LEADFREE LEADFREE LEADFREE LEADFREE LEADFREE LEADFREE

ENDURANCE + QUALITY + RELIABILITY

Constructed from the highest grade of corrosion resistant stainless steel giving you the confidence and peace of mind that health and safety comes first when it comes to water experiences. Brass fittings and faucets with long hours of sitting water is a catalyst for lead leaching, producing high levels of harmful toxins. Verotti Lead Free Tapware is committed to delivering health and wellbeing as it's highest priority.

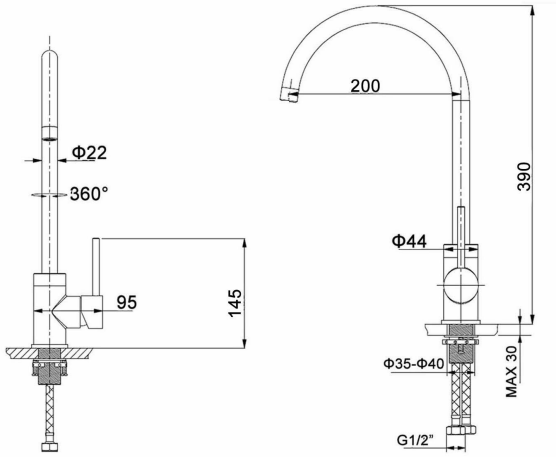

WaterMark

WATER RATING www.waterrating.gov.au

verotti Bathroom Culture

Information provided represents the actual product available at the time 01/09/2022.
The design and specification are subject to change without notice.
Dimensions are approximate.

www.verotti.com | T.1300 837 688 | customercare@verotti.com