SPECIFICATIO

BOTTLE TRAP

Model: SQUARE BOTTLE TRAP
Code: BT32SQ

Dimensions

Width: 50 mm
Depth: 300 mm max
Height: 145 mm min - 210 mm max

Features

Finish: Brass Chrome Plated
Waste: 32mm / 40mm
Connection: 40mm

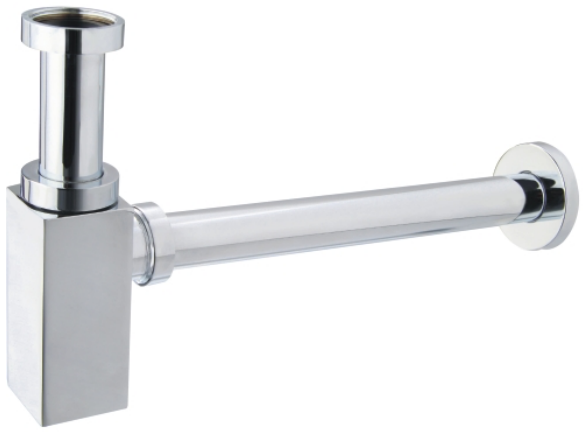

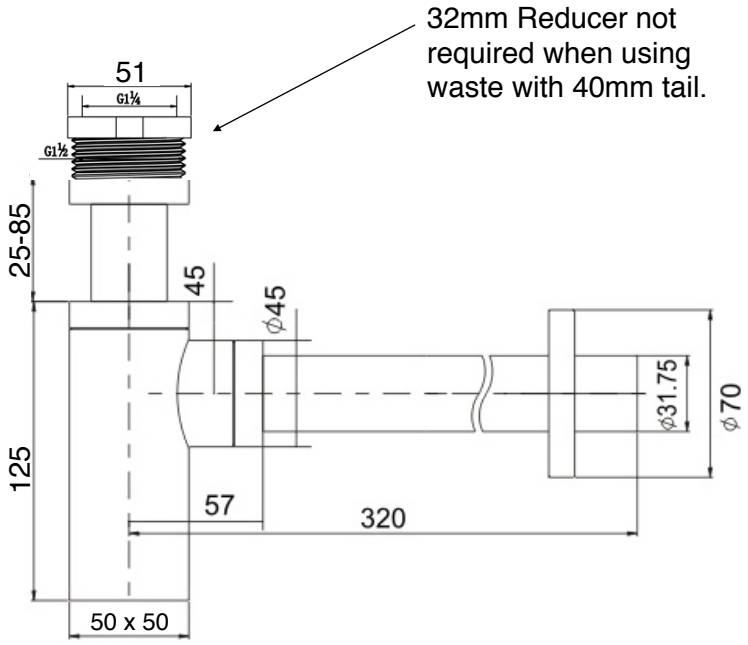

verotti
Bathroom Culture

Information provided represents the actual product available aa at 01/01/2015.
The design and specification are subject to change without notice.
Dimensions are approximate

www.verotti.com