STOFFER HOME

McCarren Double Sconce
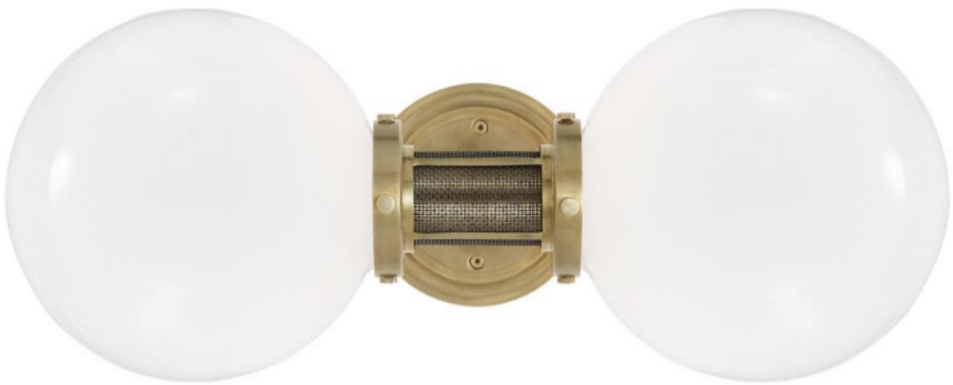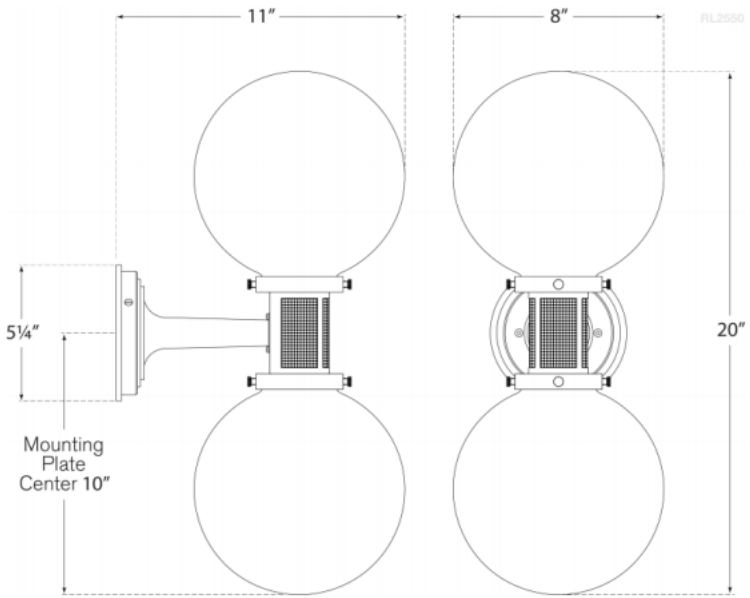
Height: 20"
Width: 8"
Extension: 11"
Backplate: 5.25" Round
Socket: 2 - E26 Keyless
Wattage: 2 - 60 A
Requires A-15 Bulb