STOFFER HOME

Edie Baluster Sconce

Height: 32.75”
Width: 10”
Extension: 7”
Backplate: 4” Square
Finishes: AN, BZ, BZ/HAB, HAB, PN
Shade Treatments: NP
Shade Details: 9” x 10” x 8” Shield
Socket: 2 - E12 Candelabra
Wattage: 2 - 40 C
Note: Requires Smaller Outlet Box

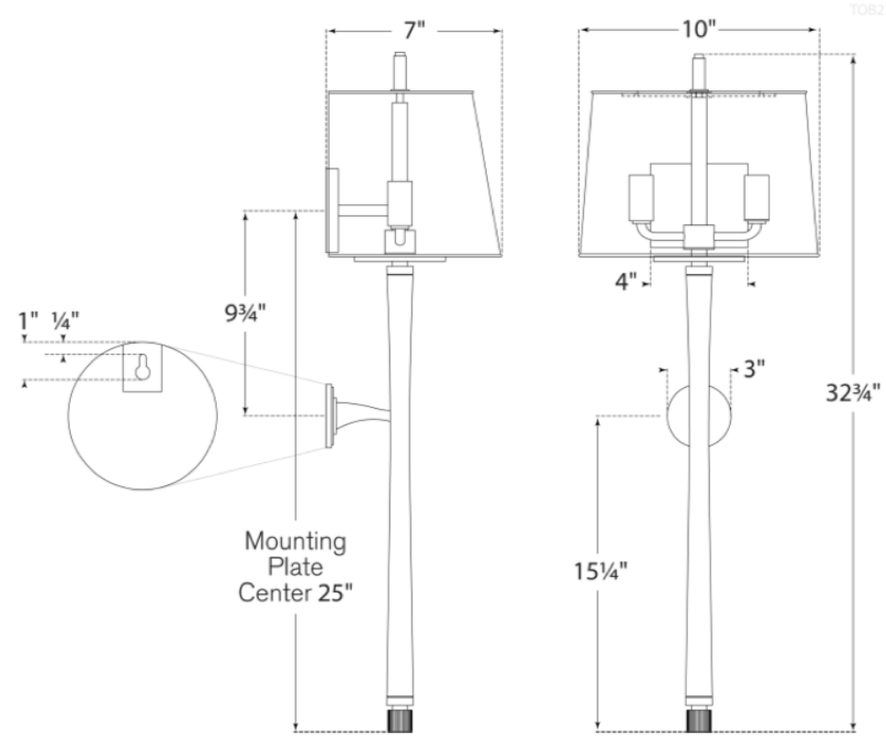

DRY
3