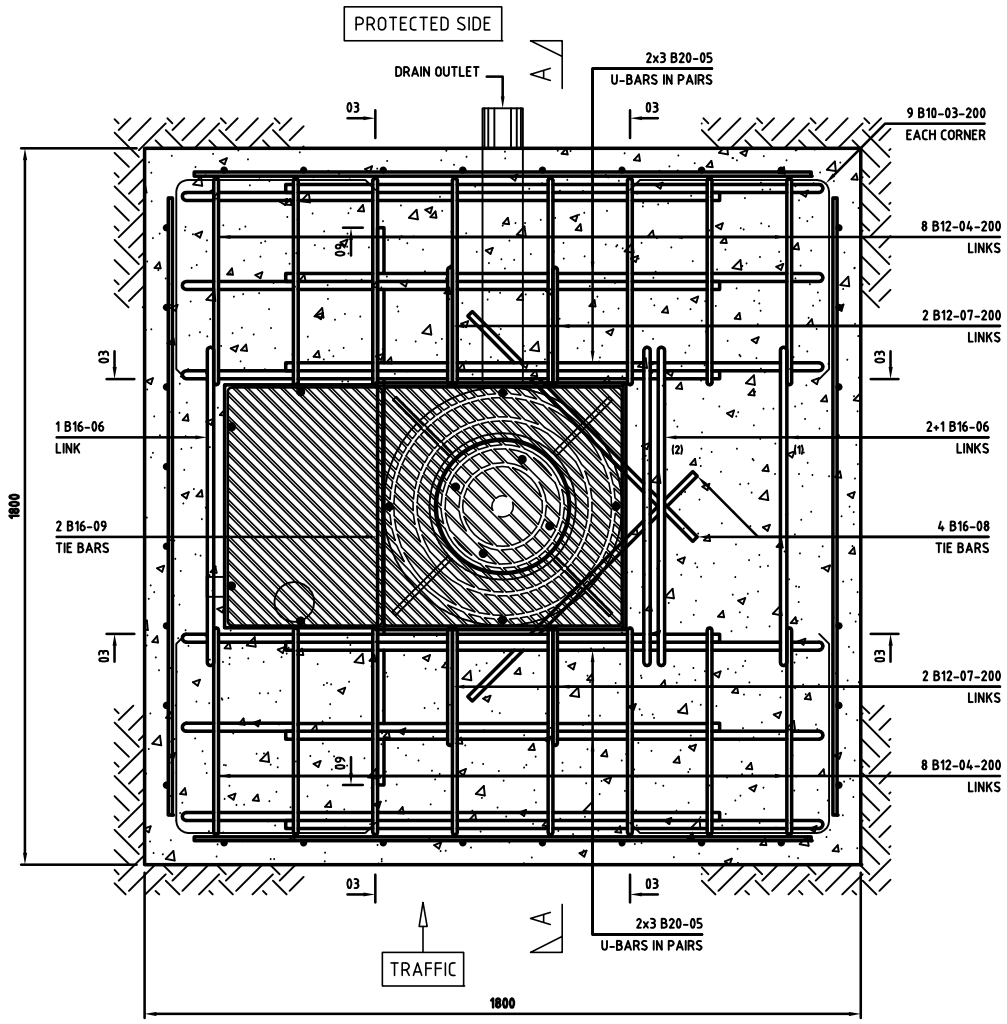

RISING BOLLARD FOUNDATION PLAN

SCALE 1:10

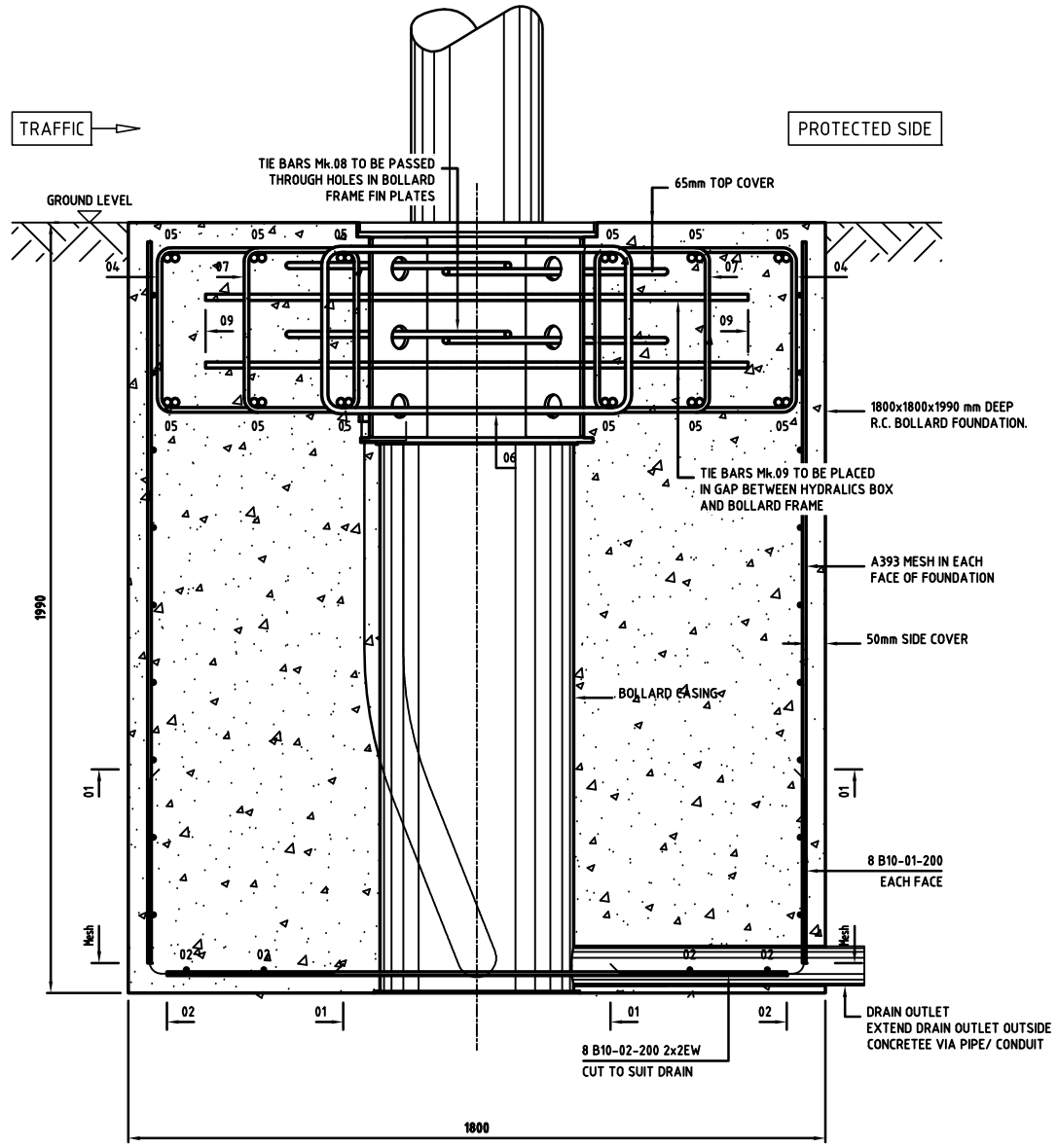

FOUNDATION SECTION A-A

SCALE 1:10

CONCRETE

- ALL CONCRETE TO BE IN ACCORDANCE WITH BS 8500, MIXES TO BE:
  BLINDING AND SOFT SPOTS –GEN 1
  REINFORCED CONCRETE – RC 32/40, DC–3
- ALL MATERIAL AND WORKMANSHIP TO BE IN ACCORDANCE WITH RECOMMENDATIONS OF BS EN 1992 EUROCODE 2.
- MINIMUM LAP: BAR REINFORCEMENT : C20ø = 1000mm
- REINFORCEMENT IS LISTED ON BAR BENDING SCHEDULE ON DRAWING
- FOUNDATION REINFORCEMENT CAGE TO BE WIRE TIED NOT WELDED TO ENABLE REINFORCEMENT TO BE ADJUSTED ON SITE IF REQUIRED.
- MINIMUM COVER TO REINFORCEMENT CAST AGAINST:–
  FORMWORK OR TOP SURFACE 50mm UNO
  BLINDING – 50mm
  EARTH FACE – 75mm (INCREASE SIZE OF FOUNDATION)
  BOLLARD STRUCTURE – 25mm
- COVER TO BE MAINTAINED BY THE USE OF PROPRIETY COVER SPACERS. BROKEN PAVING SLABS, BRICKS ETC. ARE NOT PERMITTED.
- TOP SURFACE TO BE STEEL FLOAT FINISHED

Member	Bar mark	Type and size	No. of mbrs	No. of bars in each	Total No.	Length of each bar # mm	Shape code	A* mm	B* mm	C* mm	D* mm	E/R* mm	Rev letter
Foundation	01	B10	1	32	32	1000	11	500	500				
	02	B10	1	8	8	1600	00	1600					
	03	B10	1	36	36	1000	11	500	500				
	04	B12	1	16	16	2600	63	425	520				
	05	B20	1	12	12	3000	21	1350	390	1350			
	06	B16	1	4	4	3500	63	435	800				
	07	B12	1	4	4	1925	63	425	300				
	08	B16	1	4	4	800	00	800					
	09	B16	1	2	2	1400	00	1400					

This schedule complies with BS 8666:2005

* Specified in multiples of 5mm # Specified in multiples of 25mm.

MOD N.	DESCRIZIONE			DATA	FIRMA
descrizione		gruppo		smussi n.q.	
materiale **PIANO DI FONDAZIONE XPASS B 1200C**		massa kg	trattamento superficiale	raccordi n.q.	

Questo disegno è di Ns. proprietà. A termini di legge non può essere riprodotto o comunicato a terzi senza Ns. autorizzazione.

disegnato **Zanotti A.** data

approvato data

scala **1:1** --- UNI 936

Tolleranze generali **UNI EN 22768/2-mk**

Bft Spa
Via Largo di Vico, 24
36015 Schio (VI)
T +39 0445 69 65 11
F +39 0445 69 65 22
www.bft.it

cod. **035985-B**

dis. N°