REVISIONS			
REV.	DESCRIPTION	DATE	APPR'D
A	Redrawn on SolidWorks	9/12/2013	
B	4.25 was 4.00, R.5 was R.25	10/9/2013	DC

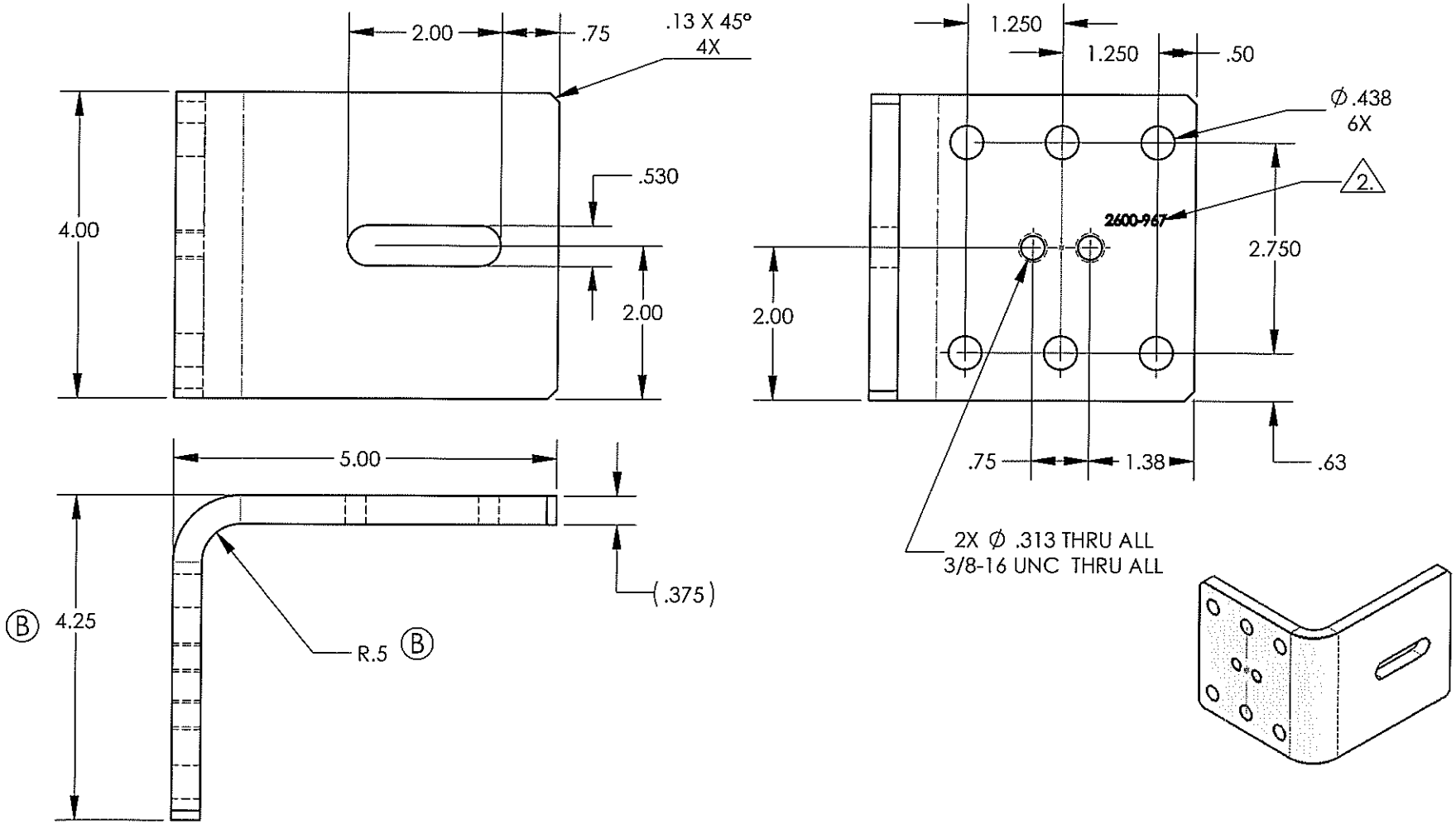

4. Zinc Plate per B-633-98 Clear, Type II, Class 2.
3. Part to be flat within 0.030 TIR.
2. Approximately where shown apply; Part number.
1. Remove all burrs and sharp edges.

Notes: Unless Otherwise Specified.

ITEM	PART #	DESCRIPTION	QTY
1	2600-967 Chain Bracket (Chain Link)	Hot Rolled Steel P&O 3/8" (0.375) Thick	1

UNLESS OTHERWISE SPECIFIED:
DIMENSIONS ARE IN INCHES. TOLERANCES: ANGULAR: ± 1.000 DEG
X.X ± 0.060 X.XX ± 0.020
X.XXX ± 0.007

MATERIAL
FINISH
APPLICATIONS
DO NOT SCALE DRAWING

NAME DATE
DRAWN DRC 4/10
CHECKED
ENG APPR.
MFG APPR.
Q.A.

PROPRIETARY AND CONFIDENTIAL:
THE INFORMATION CONTAINED IN THIS DRAWING IS THE SOLE PROPERTY OF DOORKING SYSTEMS. ANY REPRODUCTION IN PART OR AS A WHOLE WITHOUT THE WRITTEN PERMISSION OF DOORKING SYSTEMS IS PROHIBITED.

TITLE:
Chain Bracket (Chain Link)

SIZE DWG. NO. REV
A 2600-967 B

SCALE: 1:8 SHEET 1 OF 1

D C B A

5 4 3 2 1