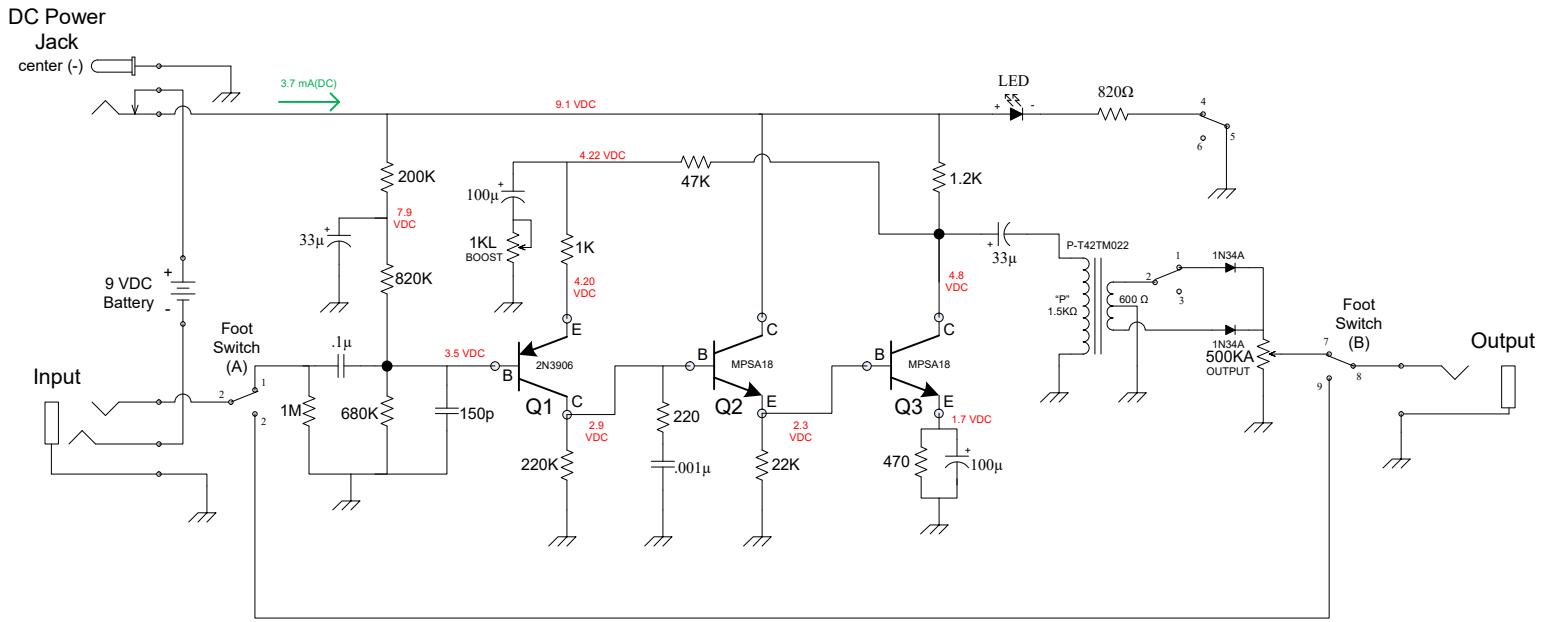

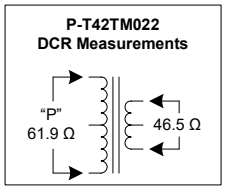

3PDT Foot Switch

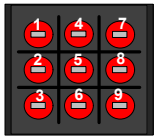

MPSA18
NPN BJT

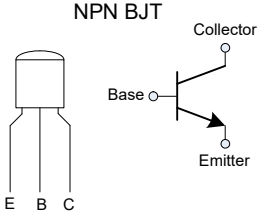

2N3906
PNP BJT

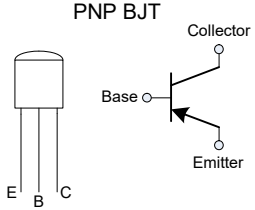

Copyright © 2021 by modkitsdiy.com

"The Ring In Return" (K-903)
Schematic