PRODUCT DRAWING

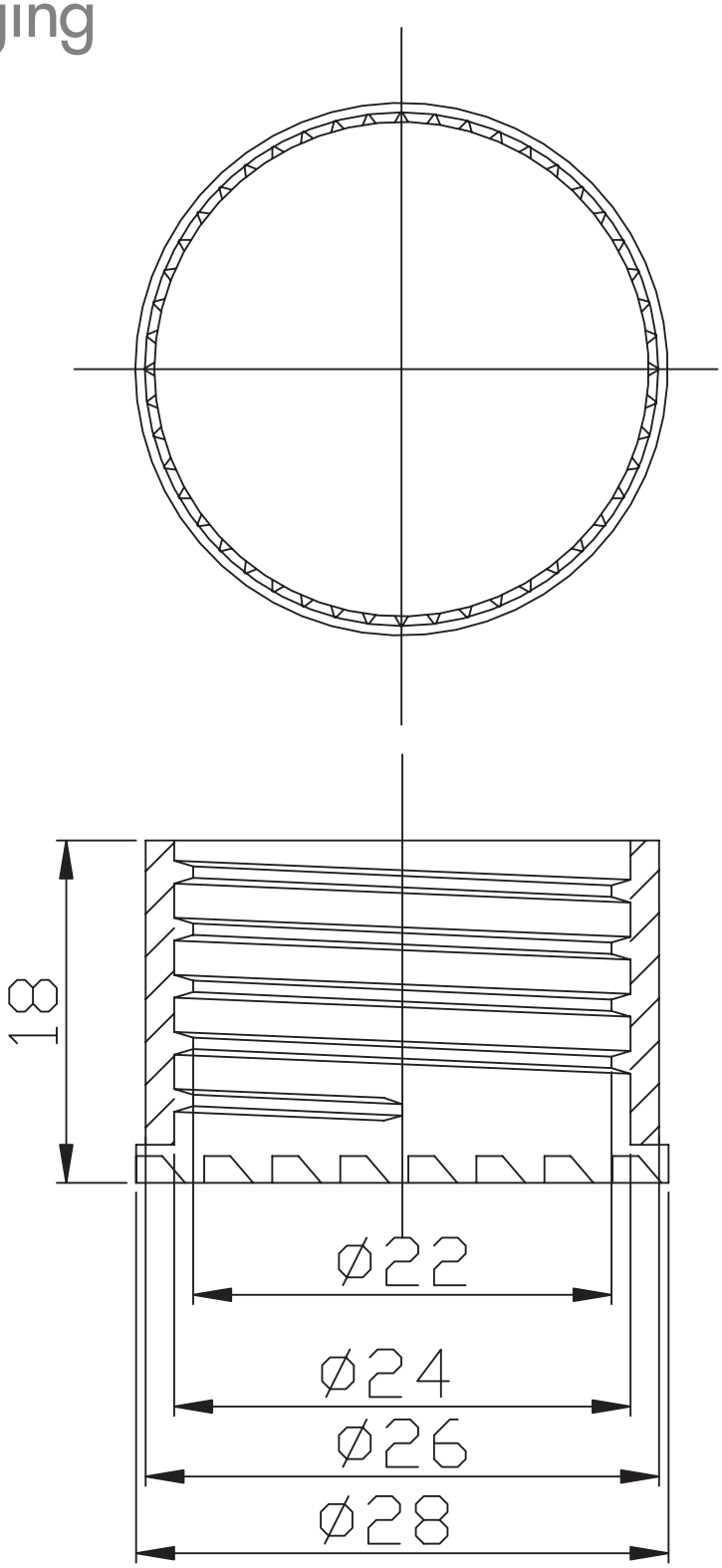

Tolerances:	0	0.0	0.00	0.000	ANG(°)	0	±1
MM	±0.5	±0.1	±0.05	±0.015		0.0	±0.5
						0.00	±0.1

Note: All dimensions and tolerances are subject to final product specification

NOT DRAWN TO SCALE

Vision Packaging (Aust.) Pty Limited 16 075 725 576		
DRAWING ID: 182capsc24-swall		DATE: 25/11/2015
NAME: SCYX Screw Cap 24/410 Smooth-Wall		
NECK: 24/410	MATERIAL: PP Polypropylene	WEIGHT: 2.20g +/- 0.2g
ITEM REFERENCE: 18286-10410		UNIT: mm