PRODUCT DRAWING

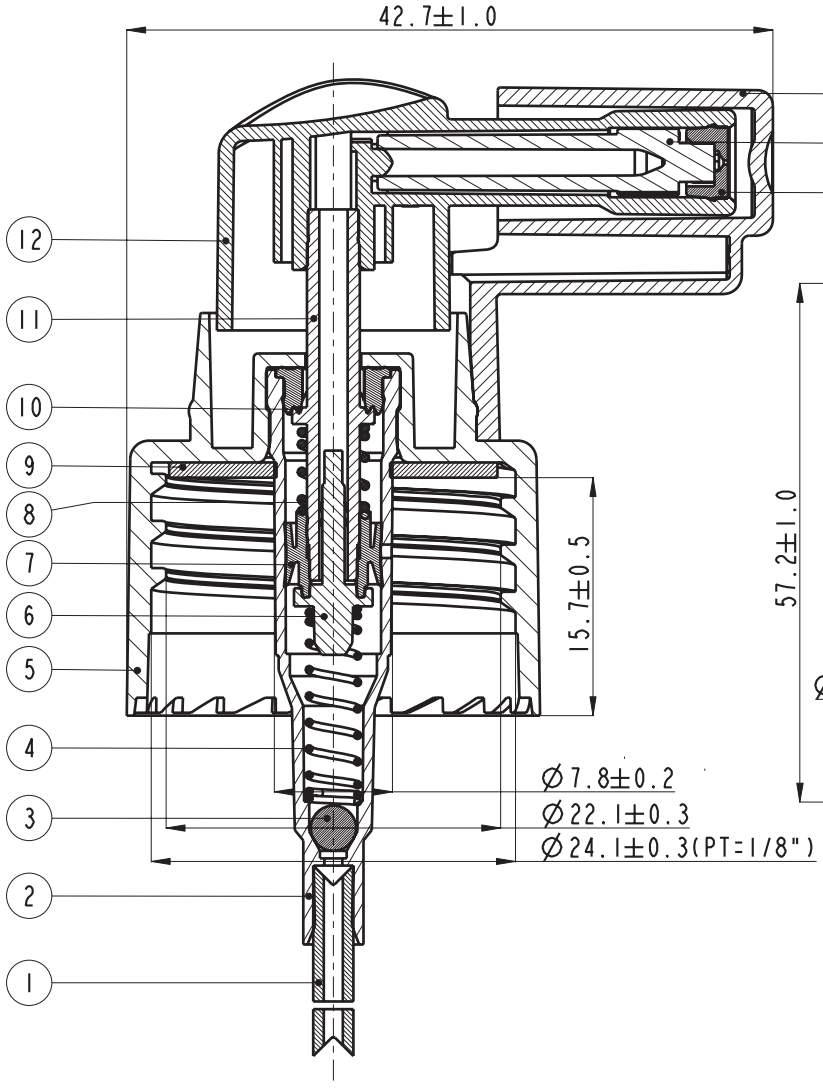

Section A-A

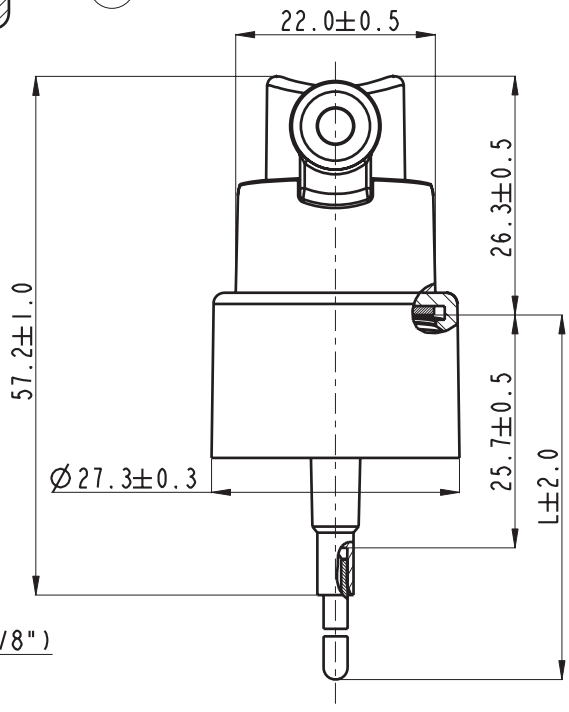

No.	Component	Material	Specification
15	Clip	PP	Color for order form
14	Pitman	PP	Natural
13	Insert	POM	Color for order form
12	Actuator	PP	Color for order form
11	Stem	POM	Natural
10	Seal	LDPE	Natural
9	Gasket	PE	Ø21.7*1.0 thickness
8	Short Spring	304H	Ø0.53*7.2L*5.5 circle
7	Piston	LDPE	Natural
6	Cone	POM	Natural
5	Closure	PP	Color for order form
4	Long Spring	304H	Ø0.45*17.0L*13 circle
3	Glass Ball	Glass	Ø3.0MM
2	Housing	PP	White W030
1	Dip Tube	LDPE	Ø2.65*0.7 thickness

TOLERANCE			○
0mm-15mm	±0.05	±0.10	±0.50
15mm-30mm	±0.05	±0.15	±1.00
30mm-50mm	±0.10	±0.20	±1.50
50mm-99mm	±0.15	±0.30	±2.00
ABOVE 99mm	±0.20	±0.40	±2.50
CENTER	±0.10	±0.50	±1.00
ANGLER	±0.25°	±0.50°	±2.00°

Vision Packaging (Aust.) Pty Limited 16 075 725 576

DRAWING ID: 157sprayefm24-gasket1.00mm | DATE: 03/07/2014

NAME: EFMZ Extender Fine Mist Spray 24/410 Smooth-Wall + Cover

NECK: 24/410 | DOSAGE: 0.14mL ± 0.020mL

NOT DRAWN TO SCALE | UNIT: mm

Note: All dimensions, materials and tolerances are subject to final product specification