PRODUCT DRAWING

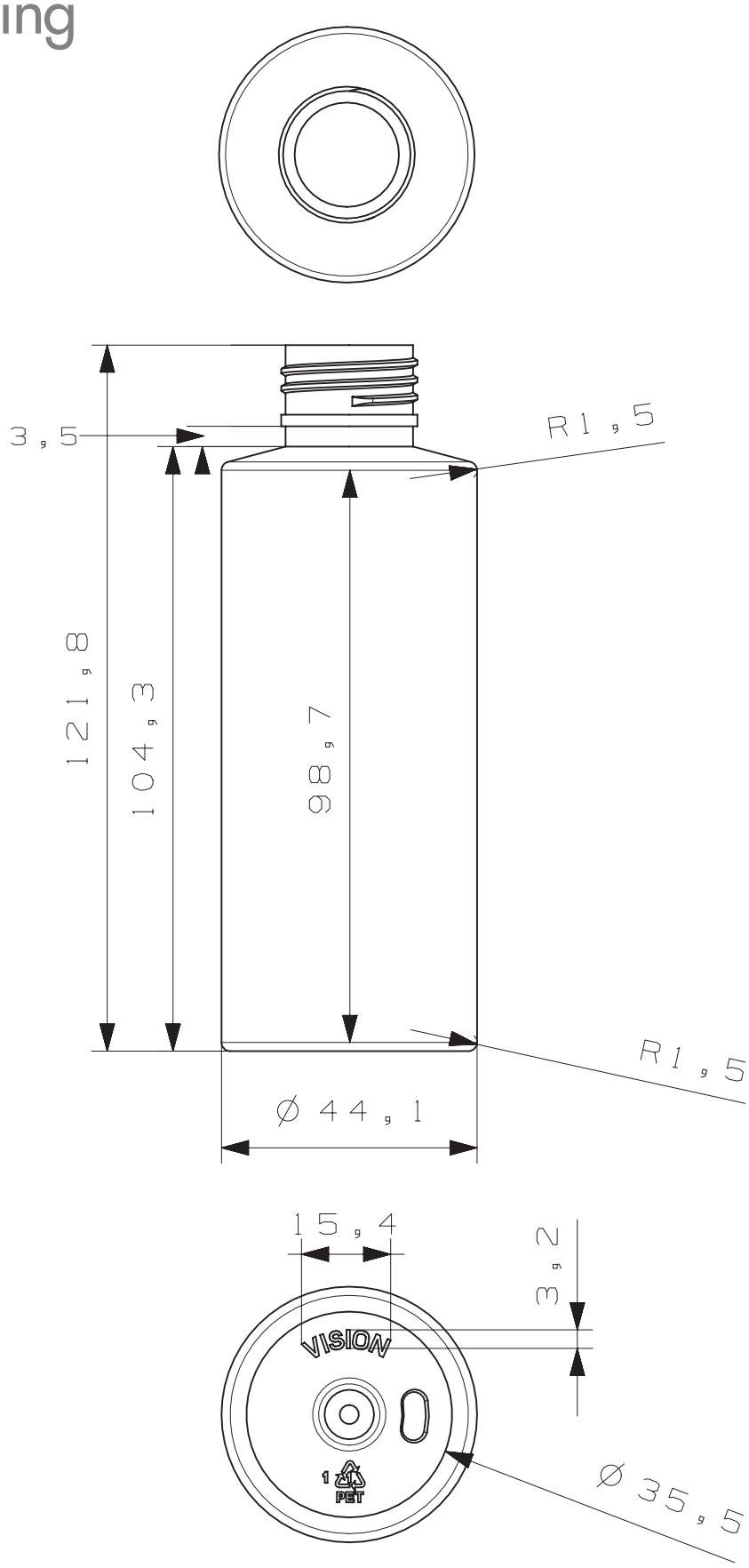

Note: All dimensions and tolerances are subject to final product specification

NOT DRAWN TO SCALE

Vision Packaging (Aust.) Pty Limited 16 075 725 576	DATE: 26/03/19
DRAWING ID: 128botvpcylinder0125	UNIT: mm
NAME: Bottle 125mL VP Cylinder	MATERIAL: PET
NOMINAL FILL: 125mL	NECK: 24/410
BRIMFUL CAPACITY: 142.0mL ± 5.0mL	WEIGHT: 14.0gm ± 2.0gm