FLAGZ
WIND POWERED SIGNAGE

38 Roma Road, Mt Roskill 1041
PO Box 57012 Auckland 1340
Tel +64 9 620 5995 **Email** info@flagz.co.nz
Website www.flagz.co.nz

Flagtrax Street Banner Template Requirements

File scaled to 10% of original.

Artwork Specifications

1. We accept files from most professional design software. Preferred formats are AI, EPS, PDF, CDR, PSD.
2. Please supply all available Pantone PMS colours and name within file if possible.
3. Please supply all Raster/ Bitmap based objects @100dpi at full size.
4. Please convert all fonts to outlinesor paths.
5. For any additional art related queries please call **(09) 620 5995**

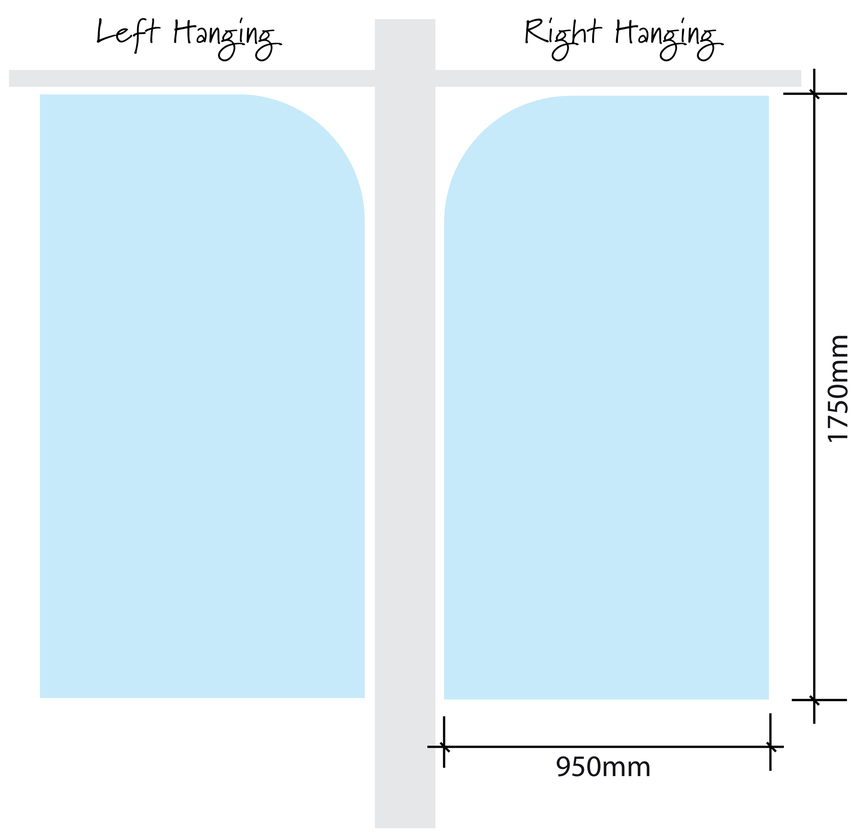

Flagtrax Street Banner (1750x950mm)

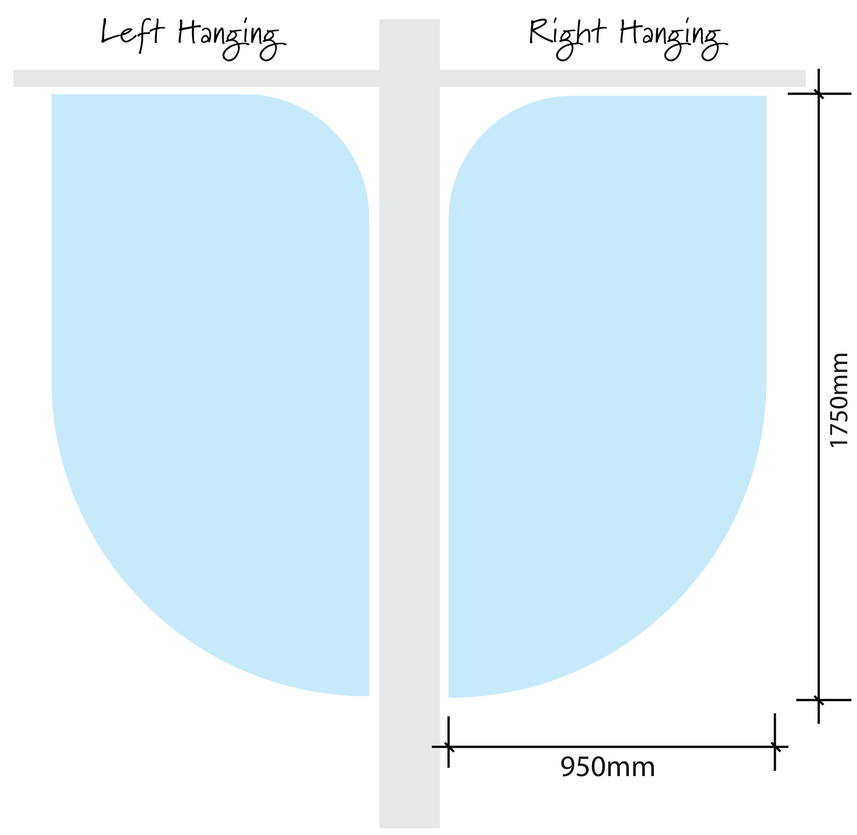

Flagtrax Curved Street Banner (1750x950mm)

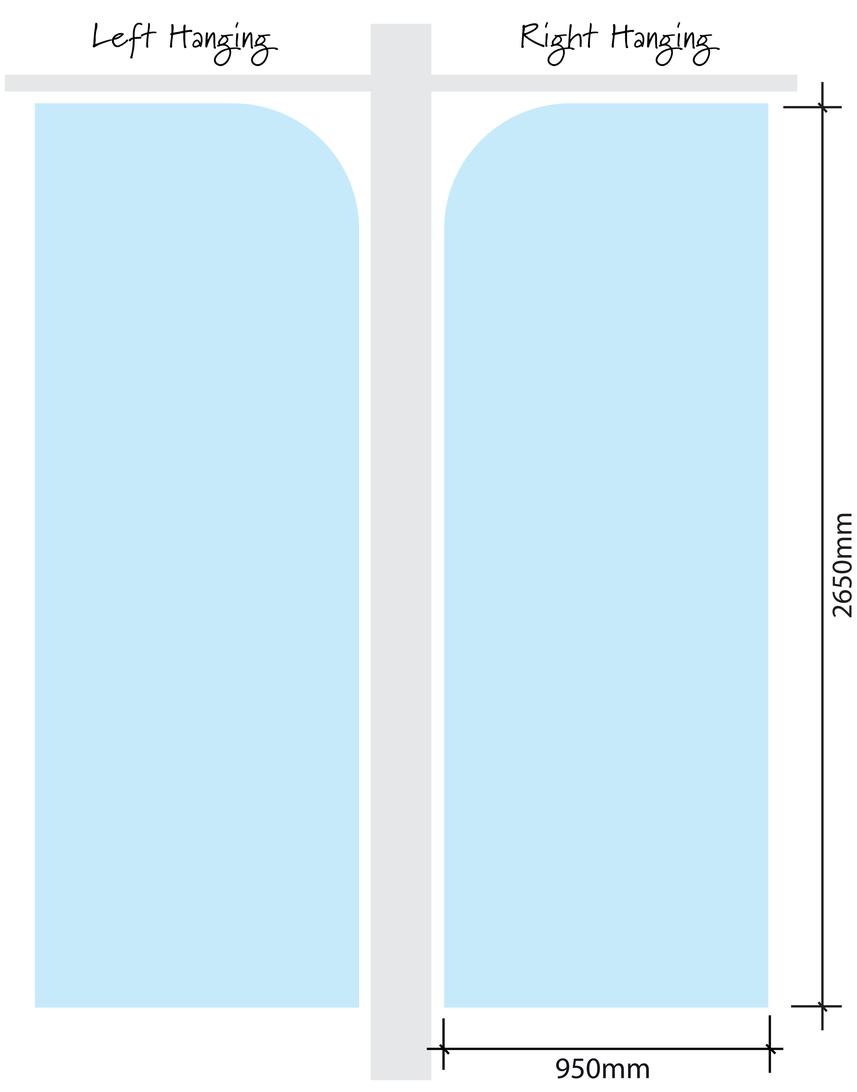

Flagtrax Street Banner (2650x950mm)

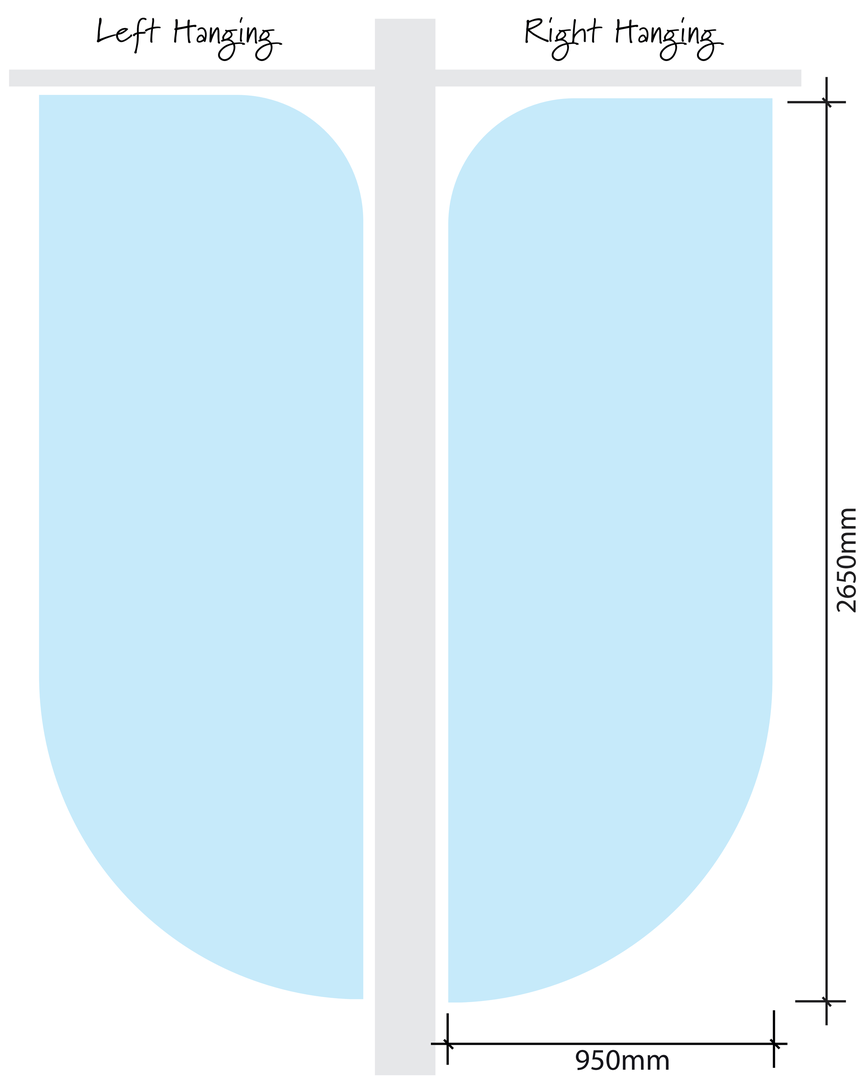

Flagtrax Curved Street Banner (2650x950mm)