PIONEER PACKAGING
Seattle • Portland

WP-501829 AG, FLT

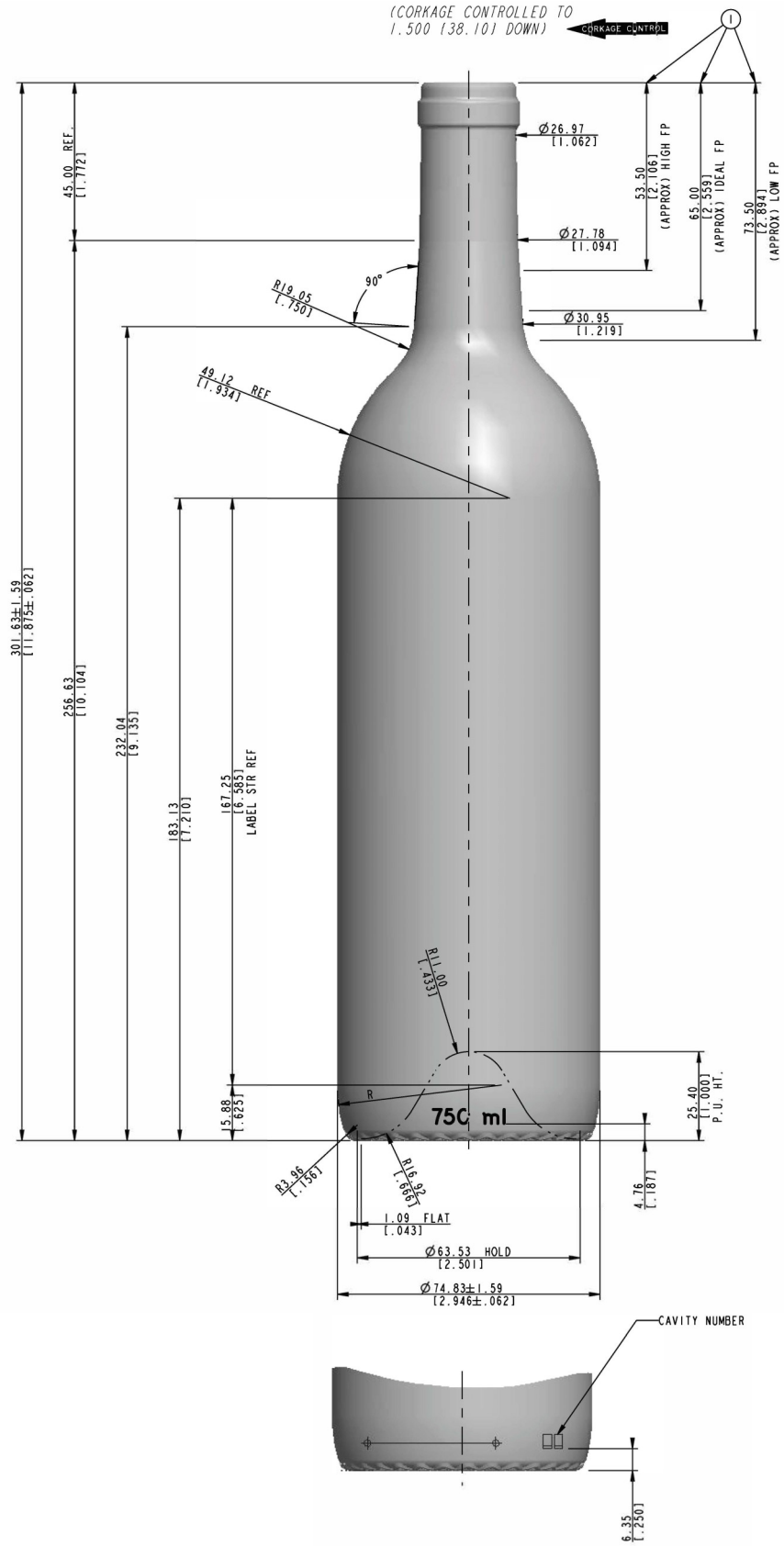

Capacity	750ml
Overflow	771ml
Weight	467 ± 21g
Height	301.63 ± 1.59mm
Body Ø	74.83 ± 1.59mm
Finish Ø	28.75mm
Bore Ø	18.5 ± 0.5mm
Pallet Quantity	112 cases