PIONEER PACKAGING
Seattle • Portland

FLUTE IMPULSION AG, FLT

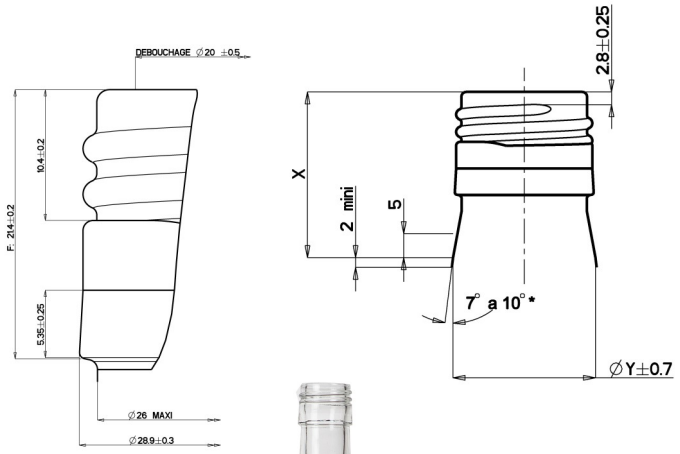

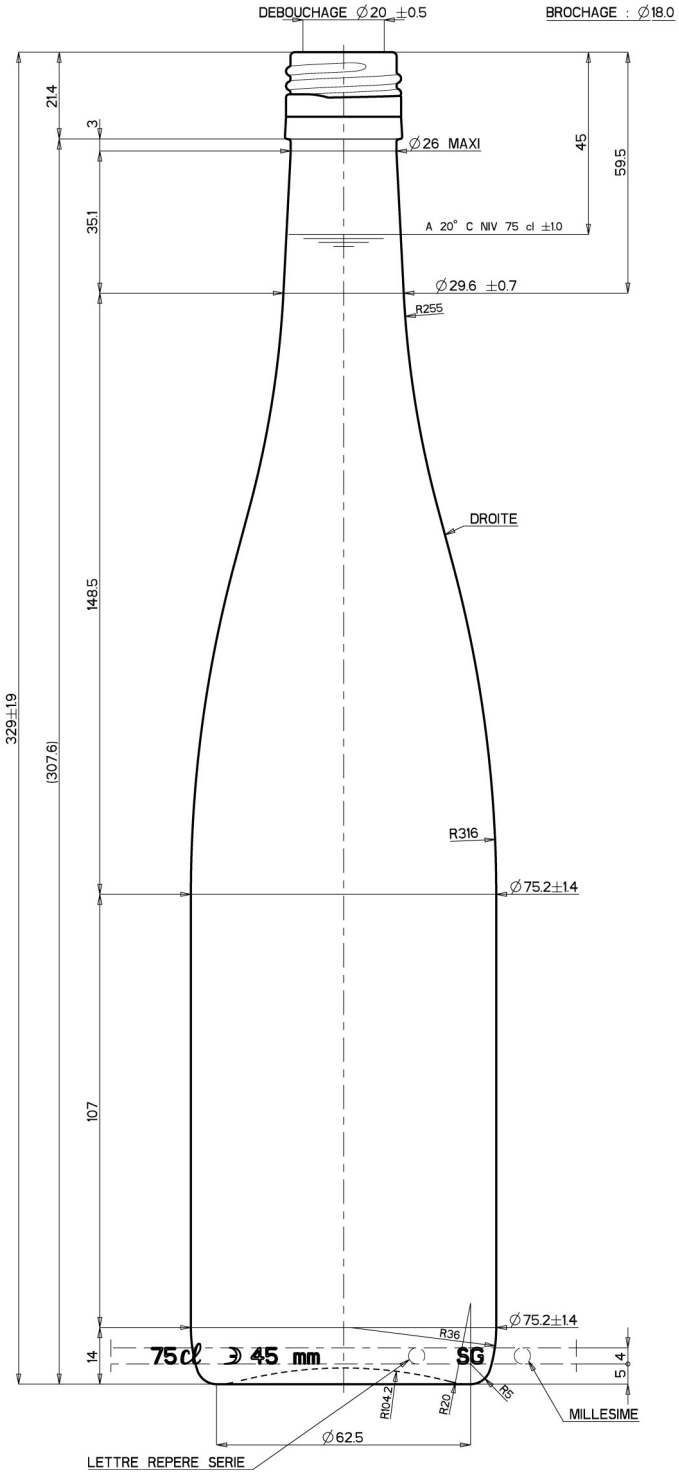

Capacity	750ml
Overflow	764.4ml
Weight	440g
Height	329 ± 1.9mm
Body Ø	75.2 ± 1.4mm
Finish Ø	BVS
Pallet Quantity	105 cases