BACKPACK

ITEM NO.	PART CODE	DESCRIPTION	QTY.
1	MSJ05	BACK PACK ONLY JET MODEL	1
2	MSJ09B	GREY BOTTLE	1
3	MSJ11	IN LINE CHECK VALVE 4mm PUSH FIT	1
4	J1SUB2	JET PUMP ASSEMBLY	1
5	12V7A	BATTERY ONLY	1
6	MSJ08D	2019 JET COILED WATER PIPE FOR BACKPACK BLACK OD35MM	1
7	MSJ02	2 CORE COILED PUMP CABLE	1
8	MSJ07B	WATER PIPE BLACK 80cm	1
9	MSJ01	3 CORE COILED CABLE WITH FEMALE METAL QUICK FIT CONNECTOR	1
10	MSJ15B	NEW HOSE END SUCTION FILTER	1
11	MSJ10B	JET BOTTLE CAP (BLACK)	1
12	MSJ45	CHARGING CABLE CONNECTION (SAE) 30cm TAILS	1
13	MSCHARGB	MOTORSCRUBBER CHARGER BODY ONLY	1
14	MSPAUK	UK PLUG ADAPTOR FOR CHARGER	1

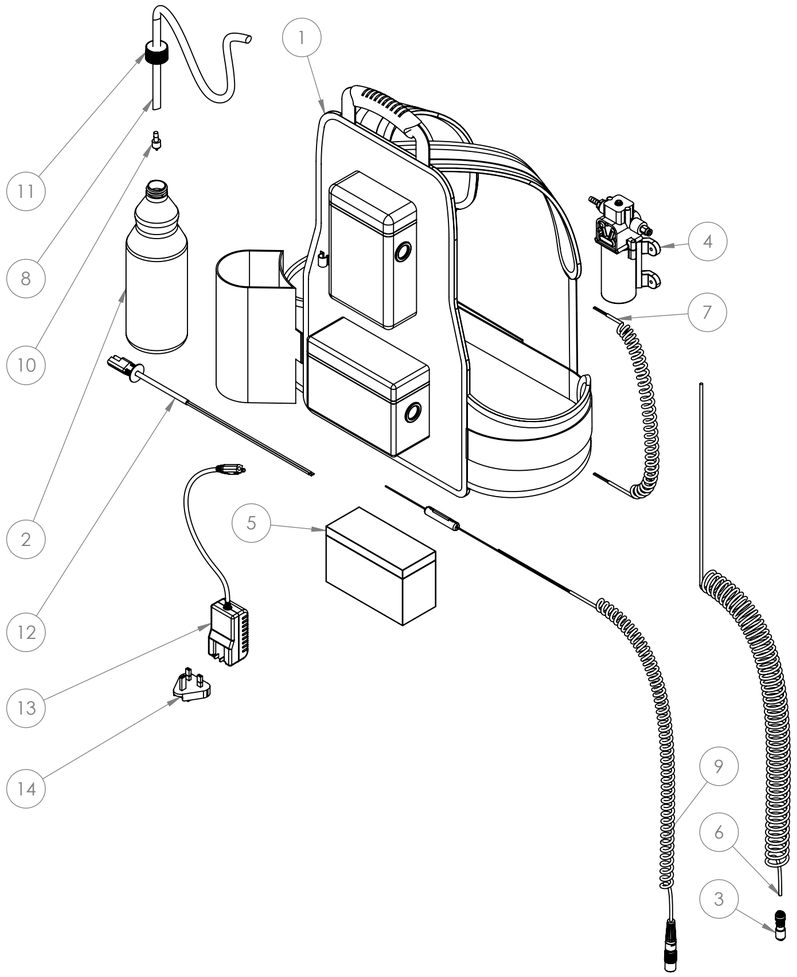

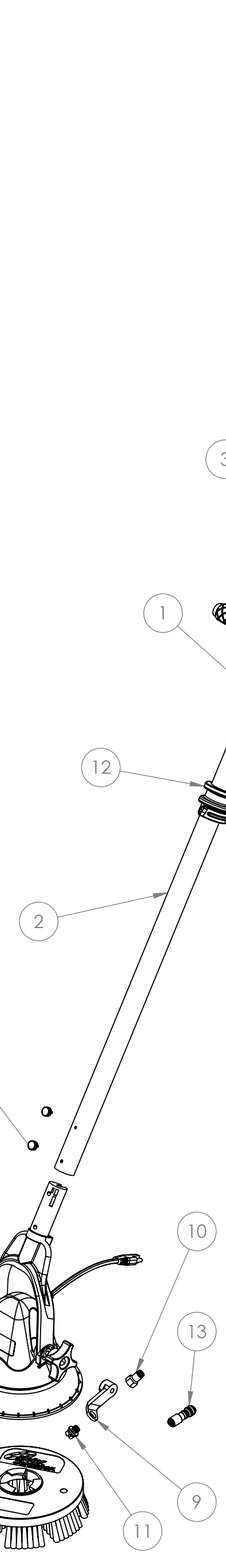

J2SUB2B

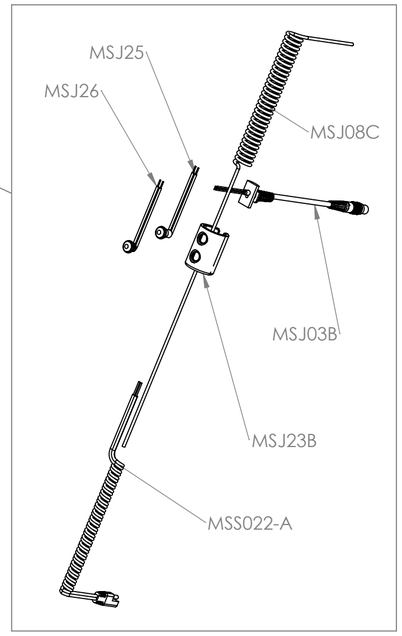

HANDLE

ITEM NO.	PART CODE	DESCRIPTION	QTY.
1	MS3003	ALUMINIUM TUBE	1
3	MS3004B	NEW GRAB HANDLE	1
4	MSS103	NEW RUBBER GRIP FOR 32mm HANDLE WITH LOGO	1
5	J2SUB2B	2019 JET SWITCH HOUSING COMPLETE ABS	1
6	MS1041	MEDIUM DUTY BRUSH	1
7	MSS172B	2019 GREY THUMB SCREW 1 PIECE FITS THE HEAD TO HANDLE	2
8	MSGREY12	2019 MOTORSCRUBBER MOTORHEAD COMPLETE GREY WITH 2019 YOKE	1
9	MSJ50	STAINLESS JET ARM BRACKET	1
10	MSJ14B	1/8" BSP 4mm PUSH FIT FEMALE CONNECTOR	1
11	MSJ42B	PLASTIC JET PVDF FOR JET MODEL 2019	1
12	MSS032	HANDLE FLIP CLIP 32mm	1
13	MSJ11	IN LINE CHECK VALVE 4mm PUSH FIT	1

REVISION	CHANGE NOTES
REV. 0	Initial Release
STATUS In Work	

MOTOR SCRUBBER®
8c Orgreave Road, Sheffield
United Kingdom, S13 9LQ
T. (+44) 114 478 8710

PROPRIETARY AND CONFIDENTIAL
The data and information disclosed on this drawing are the exclusive property of Motor Scrubber and may be subject of U.K.and foreign patents and/or applications. Reproduction, copying, disclosure or use of this drawing,data and information without the written permission of Motor Scrubber is strictly Prohibited. Copyrighted.

Part Code MSJET3UK

Drawn by: Frankie Römer **Date:** 23/09/2020

Approved By: **Date:**

Description
MotorScrubber JET3 Starter Kit UK

Weight (g): 1930.53

All dimensions in mm unless otherwise specified SHEET SIZE: A2 SCALE:1:6 SHEET 1 OF 1