SAF-T-BAR

Electrification Systems

Series J

400 - 500 amperes

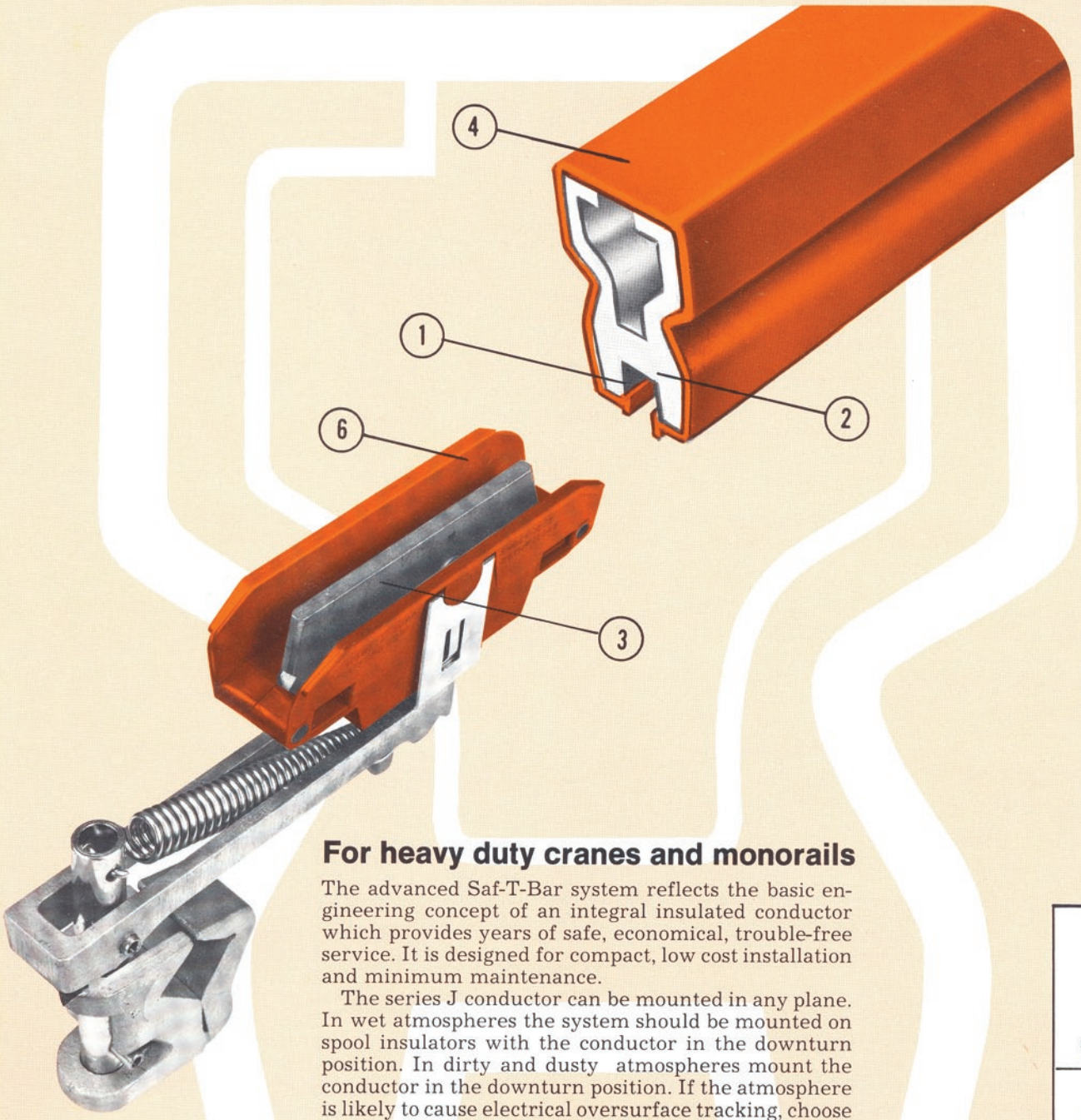

Saf-T-Bar Features

1. **METAL GUIDEWAYS** assure positive tracking of collector shoe. Collector tracks with or without insulating cover.
2. **FLAT CONTACT SURFACE** for long conductor wear, a stainless steel insert providing corrosion resistance and resistance to electrical pitting.
3. **CONTACT SHOE** with flat contact surface of sintered copper and graphite, self lubricating for effective draw of current to the collector.
4. **SKIN TIGHT INSULATION** runs cooler, will not deform under clamp pressure. Standard insulation is 160°F. Higher temperature insulation to 260°F. is available.
5. **COMPACT MOUNTING** of conductor in vertical or horizontal position without special parts for fittings.
6. **COLLECTORS** are available in either single or dual head construction.

For heavy duty cranes and monorails

The advanced Saf-T-Bar system reflects the basic engineering concept of an integral insulated conductor which provides years of safe, economical, trouble-free service. It is designed for compact, low cost installation and minimum maintenance.

The series J conductor can be mounted in any plane. In wet atmospheres the system should be mounted on spool insulators with the conductor in the downturn position. In dirty and dusty atmospheres mount the conductor in the downturn position. If the atmosphere is likely to cause electrical oversurface tracking, choose the spool type hanger clamps rather than the standard coated hanger clamp. Conductors are supported on brackets on 5 ft. centers for all crane conductor positions.

Series J conductors are supplied in 20 ft. lengths assembled complete with insulating covers. Other lengths are available. Joint fittings and covers are to be ordered separately.

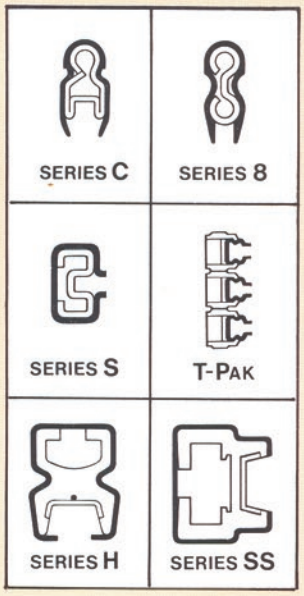

INDUSTRIAL POWER & CONTROL

ENERGY SOLUTIONS FOR CRANES, HOISTS & MONORAILS

Toll Free: 1 (888) 822-2024
Fax: 1 (519) 822-2140
info@ipandc.com www.ipandc.com

Series J SAF-T-BAR CONDUCTORS 400/500 AMPERES

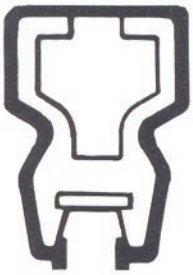

INSULATION TYPE & TEMP. RATING		CONDUCTOR CAT. NO.	SPLICE JOINT	POWER FEED	HANGER CLAMPS		EXPANSION GAP KIT	END CAP
					CLAMP	SPOOL		
PVC	400A	JA-400	JA-400J	JA-400F	JA-400H	JA-400K	JA-400XG-4"	JA-400N
160•F	500A	JA-504	JA-504J	JA-504F	PLATED	PLATED	JA-504XG-4"	JA-400N
LEXAN	400A	JA-400H	JA-400HJ	JA-400HF	JA-400HN	JA-400KN	JA-400HXG-4"	COVER
260•F	500A	JA-504H	JA-504HJ	JA-504HF	COATED	COATED	JA-504HXG-4"	EXTENSION
					JA-400P	JA-400PH		
					LEXAN +	HAT		

Conductor Rail Characteristics

Combined weight per foot	.685
Weight of aluminum per foot 6101-T6	.48
Weight of 304 stainless steel per foot	.085
Aluminum cross sectional area, sq. in.	.40
R - Resistance OHMS/Foot	.00004
Z - Impedance OHMS/Foot 2" c/c	.0000513
Z - Impedance OHMS/Foot 3" c/c	.0000579
Weight of vinyl cover/Foot	.12

Rate 600V AC 250V DC

RAIL JOINTS

Joining sections by a bolted splice is as easy as A, B, C.

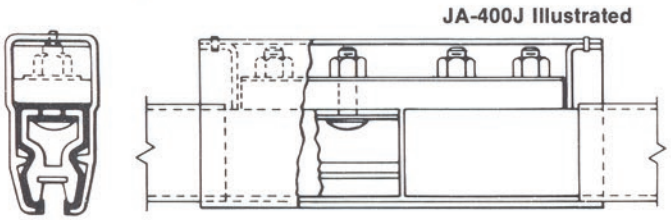

JA-400J / JA-400HJ
JA-504J / JA-504HJ

Conductors are joined by a bolted splice assembly, comprised of two spring plates, splice bars, steel bolts, and hex assembly nuts. The conductor assemblies are aligned at the joint by the inside spring plate, which when pulled flat when the rail splice is tightened, will align the adjacent rail section. The longitudinal cavity in the conductor may be used for a heater wire if required.

To join the adjacent conductor rails, abrade the joint surfaces of the conductor rail only, with a fine brush or abrasive cloth, coat thoroughly with Alcoa #2EJC compound immediately after abrading. *Don not abrade splice bar terminals, as they are tin plated to be corrosion free.* Assemble joint without removal of compound. Tighten assembly nuts until the joint is fully torqued. Snap the insulating splice cover into place to complete the joint. Make certain that the splice joints are at least 12 inches away from a hanger clamp to allow for adequate expansion and contraction movements of the rail assembly.

Isolation Joints are used for circuit segmentation and comprise a hex shaped plastic insert between two adjacent conductor ends, gapped to 1". Two locating bolts in each hole assure conductor separation. The joint is then protected by a joint cover.

POWERFEEDS

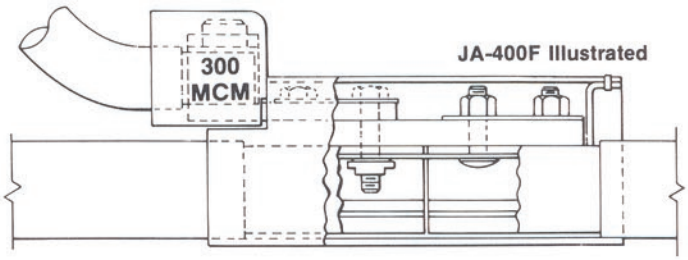

JA-400F / JA-400HF
JA-504F / JA-504HF

Powerfeeds for Supply Power connections are designed to be installed instead of a rail splice joint, where required. A suitable insulating cover is provided so that the terminal face is protected from accidental contact. Insulation of powerfeed joints is the same procedure as for regular conductor rail splices.

Powerfeed conductor bar surfaces are prepared with electrical joint compound using the same procedure as on conductor splices.

END CAPS

End Cap. Standard length rails have 2½" exposed ends which may be insulated by a 4" flexible boot or end cap. Standard and short length rail ends may be insulated by a 4" extension of the cover beyond exposed rail and be designated as end lengths.

Cutting. Power rail may be field cut with a hacksaw as required. Remove all sharp edges on cut end of conductors by deburring with a file.

HANGER CLAMPS

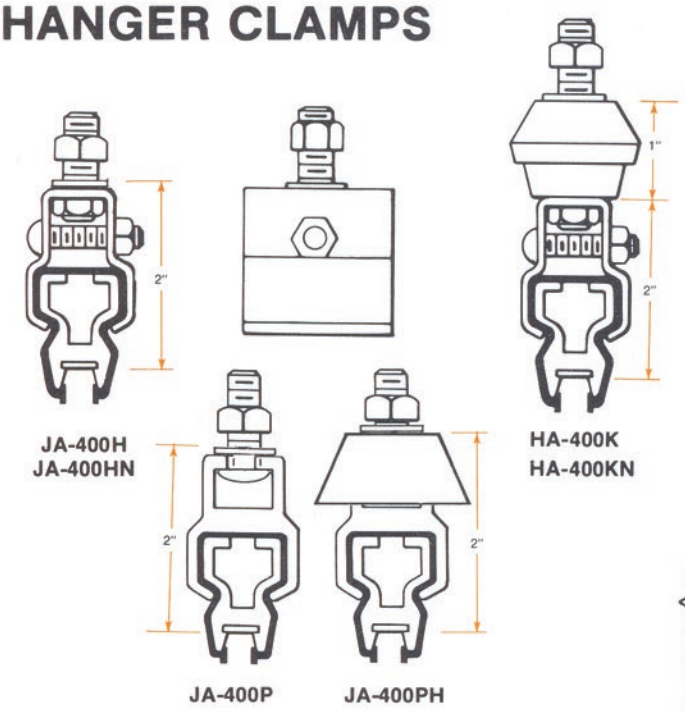

Hangers. The following types are avialable and their uses are indicated:

JA-400H	Indoors, clean, dry applications, zinc plate
JA-400HN	Indoors, dirty, dry applications, coated
JA-400K	Indoors, outdoors, wet, dirty applications, spool and zinc plate.
JA-400KN	Indoors, outdoors, wet, dirty corrosive applications, spool and coated
JA-400P	Can be used to replace all above hangers. Polycarbonate Lexan
JA-400PH	Lexan hanger and rain hat.

Mounting. Hanger clamp brackets can be attached to the runway beam by welding or bolting. Conductor must be spaced at least 2 inches apart. Hanger clamp brackets will require 3/8 inch holes for hanger clamp bolts of 5/16 inch. Conductor hanger clamps should be slid onto the rail and positioned relative to the appropriate hanger clamp bracket, so that when the rail is raised into place, the hanger clamps may be bolted to their respective bracket. Hanger clamp cross bolts should be tightened so that the rail will slide easily, but will be securely supported.

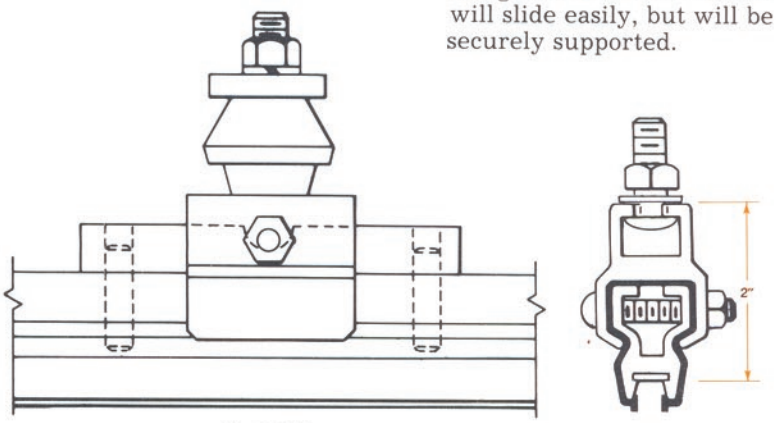

JA-400KA
TYPICAL ANCHOR

JA-400PA

Anchor Clamps. On cross bolt hangers, this consists of a locating block used to secure the conductor to the hanger; to create a fixed point on the mid point of a system, or the mid point between expansion gaps.

On the polycarbonate hanger, the anchor is achieved by drilling through the hanger body (factory drilled) and the upper conductor section (field drilled) and inserting a threaded rod, held in place by insulating acorn nuts on each side.

4" EXPANSION GAP

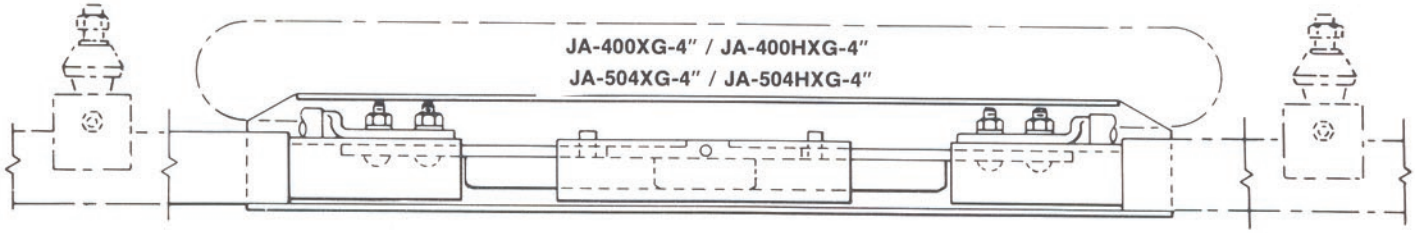

Expansion Gap Assemblies are preassembled, ready to be installed between two adjacent sections of rail. Each end of the expansion mechanism is attached to its mating rail end with a power feed type rail splice. The expansion mechanism is a telescoping interleaved unit, having a travel of 4 inches, providing a constant sliding surface for the collector shoe for mechanical support only. The gap assembly is 6 inches long closed, and 10 inches expanded. The gap assembly should be set at 2" when installed at 60°F for average use.

Expansion gap assemblies are based on 280 foot conductor intervals with a 100°F temperature variation. Aluminum conductors will expand one inch in 70 feet per 100°F temperature variation. If greater temperature variations are expected, a proportional decrease in the 280 foot interval is required. Conductor systems up to 280 feet in length that are either all indoors or all outdoors can be center anchored and do not require an expansion gap assembly. Systems that are longer than 280 feet require expansion gap kits every 280 feet or fraction thereof. Systems that pass from inside to outside in areas of extreme temperature should have an expansion gap kit located just within the building.

The center point of all conductor runs using expansion gaps requires an anchor clamp to locate rail settings.

Jumper cables 3/0AWG for 400A and 250MCM for 500A are included to complete the electrical circuit across the expansion mechanism. Tandem collectors are required on any crane runway system using expansion gap kits to provide current draw when passing through the expansion gap mechanism.

Series J COLLECTORS

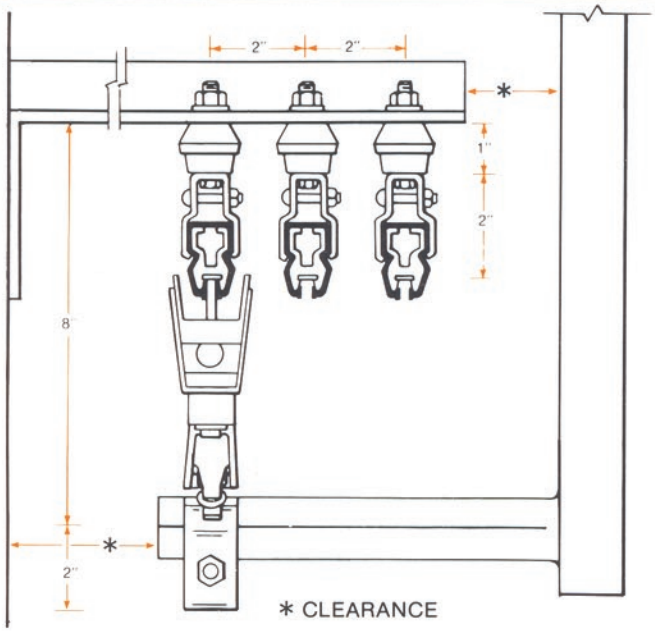

The collector is basically a self-lubricating copper graphite shoe clamped in an insulating housing (the collector head), and held firmly against the conductor by a pantograph spring linkage. Crimp type lugs are furnished for electrical connection to the shoe. Pigtails will be supplied on request.

The collector head pivots at shoe contact height so that the shoe glides along the conductor and maintains full face contact.

The linkages are fabricated of high tensile aluminum alloy and include a spring arm with the collector head and yoke swiveled at one end. The spring arm swivels in a base to provide for horizontal misalignment. The base clamps to a 1" square bar (not furnished). The spring allows for vertical misalignment, applies contant pressure to the collector shoe throughout the stroke.

150 amp collectors are designed for use on straight runs only.

See Parts List for ratings.

SAF-T-BAR SERIES JA400/JA504 PARTS LIST

	AMPS	WT	CAT #
20' Conductor Sections	400	14	JA-400
Insulated PVC Cover	500	14	JA-504
20' Conductor Sections	500	14	JA-400H
Insulated Lexan Cover	500	14	JA-504H
Joint Kit with Cover	400	.50	JA-400J
PVC	500	1.00	JA-504J
Joint Kit with Cover	400	.50	JA-400HJ
Lexan	500	1.00	JA-504HJ
Powerfeeds with Cover	400	.60	JA-400F
PVC	500	1.0	JA-504F
Powerfeeds with Cover	400	.60	JA-400HF
Lexan	500	1.00	JA-504HF
Expansion Gap Kit	400	5.0	JA-400XG-4"
PVC	500	6.0	JA-504XG-4"
Expansion Gap Kit	400	5.0	JA-400HXG-4"
Lexan	500	6.0	JA-504HXG-4"
Isolation Joints	ALL	1.0	JA-400IS
End Cap - PVC only	ALL	.08	JA-400N
Hanger Clamps	ALL		
Plated	ALL	.25	JA-400H
Coated	ALL	.30	JA--400HN
Plated with Spool	ALL	.35	JA-400K
Coated with Spool	ALL	.40	JA-400KN
Lexan	ALL	.25	JA-400P
Lexan with Rain Hat	ALL	.30	JA-400PH
Anchor Hangers			
add suffix letter "A" — All Series			
Collectors			
Continuous - Single Head	100	3.0	JA-150L
Crane Rated - Single Head	150	3.0	JA-150L
Continuous - Dual Head	200	6.0	JA-150LL
Crane Rated - Dual Head	300	6.0	JA-150LL

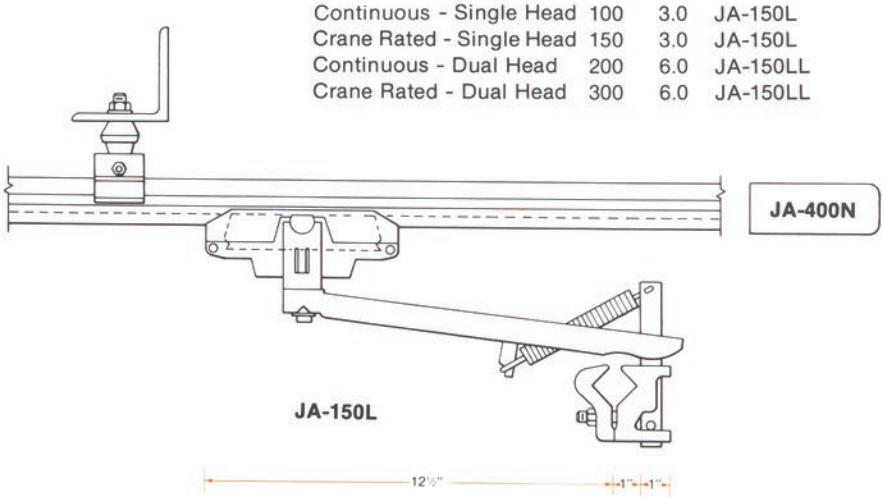

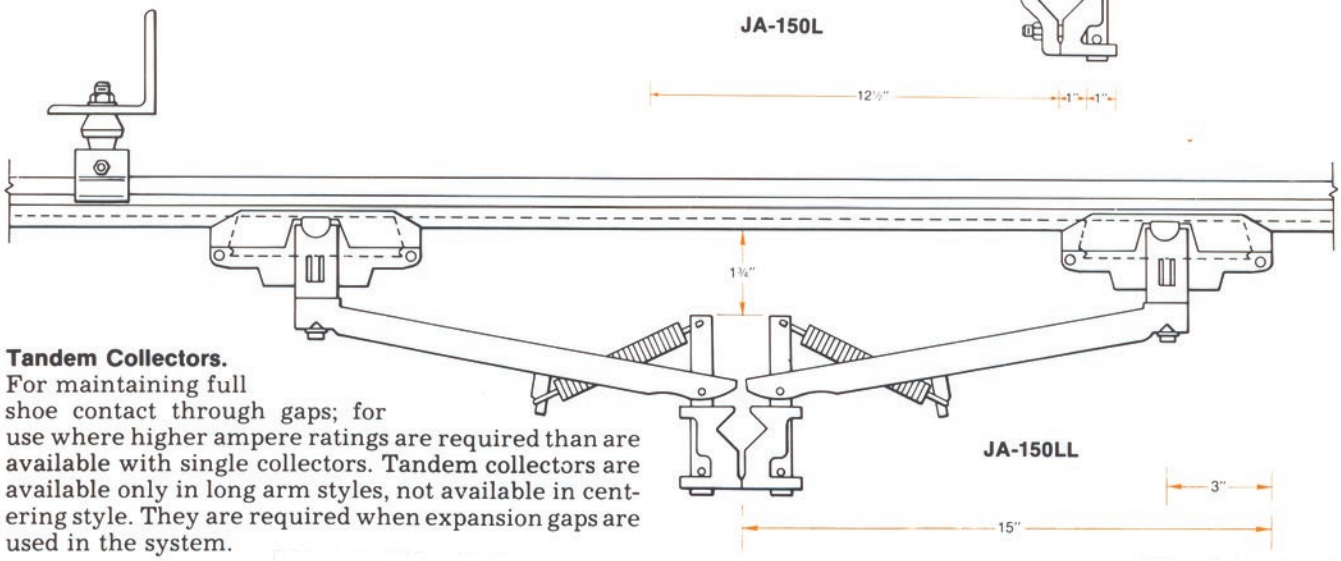

Tandem Collectors.
For maintaining full shoe contact through gaps; for use where higher ampere ratings are required than are available with single collectors. Tandem collectors are available only in long arm styles, not available in centering style. They are required when expansion gaps are used in the system.

INDUSTRIAL POWER & CONTROL
ENERGY SOLUTIONS FOR CRANES, HOISTS & MONORAILS

Toll Free: 1 (888) 822-2024
Fax: 1 (519) 822-2140
info@ipandc.com www.ipandc.com

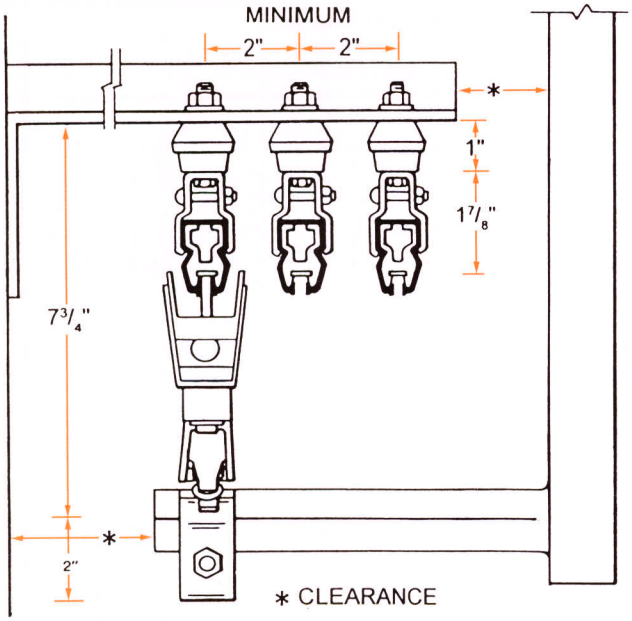

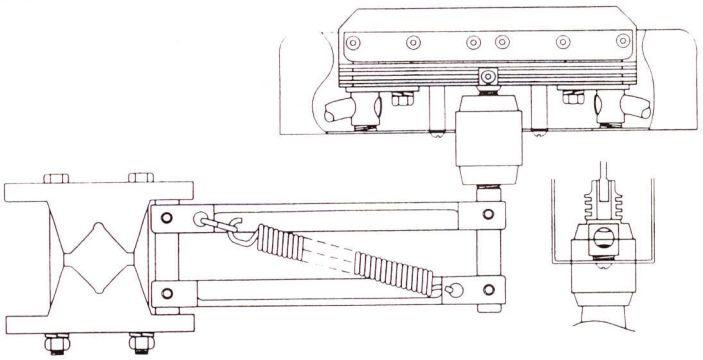

JA-200DSHS — JA-400DDSHS HEAT SINK COLLECTORS

Two types of collector are available. JA-150L single, JA-150LL dual are available with cast aluminum arms and bodies, or glass-filled polycarbonate plastic which offers double insulation, plus corrosion resistant components. Contact brushes have a contact base that can accept double #4 pigtails if required. Collectors are are rated at 150 amps per head crane duty.

JA-200DSHS single, JA-400DDSHS dual are available with cast aluminum arms and bodies, in a pantograph type construction, plus they utilize a heat sink contact shoe base to maximize the continuous collector rating. Each contact is rated at 200 amps continuous or at 300 amps intermittent crane duty.

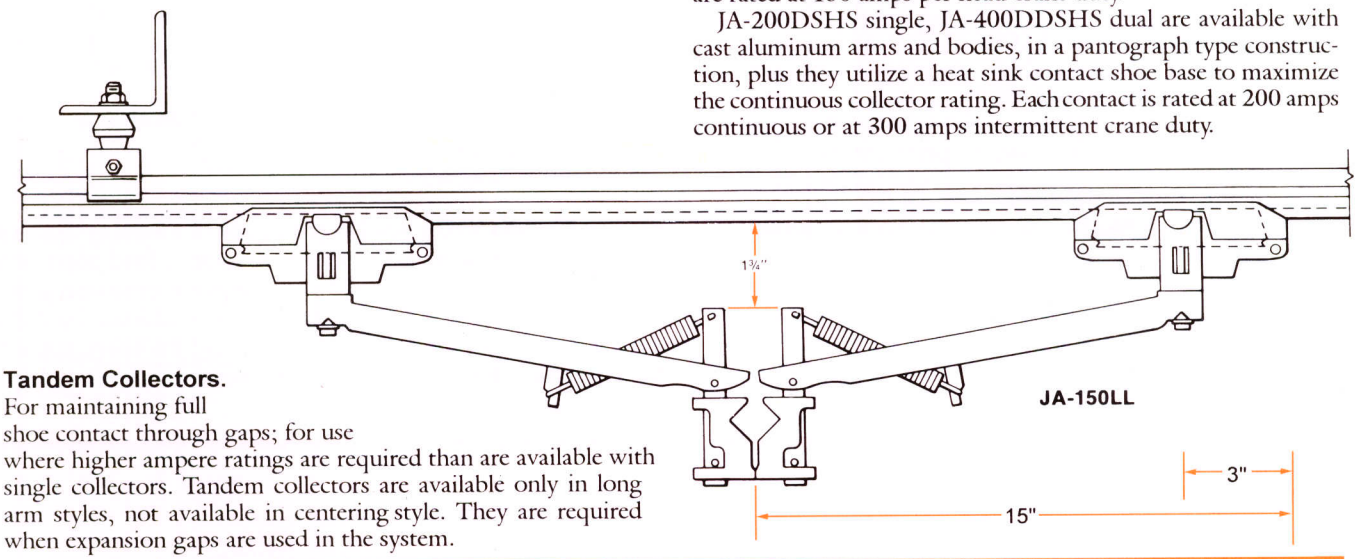

Tandem Collectors.
For maintaining full shoe contact through gaps; for use where higher ampere ratings are required than are available with single collectors. Tandem collectors are available only in long arm styles, not available in centering style. They are required when expansion gaps are used in the system.

PARTS LIST — SAF-T-BAR SERIES JA400/JA504

PART	AMPS	WT	CAT #
20' Conductor Sections	400	14	JA-400
Insulated PVC Cover	500	14	JA-504
20' Conductor Sections	500	14	JA-400HH
Insulated Lexan Cover	500	14	JA-504HH
Joint Kit with Cover	400	.50	JA-400J
PVC	500	1.00	JA-504J
Joint Kit with Cover	400	.50	JA-400HHJ
Lexan	500	1.00	J-504HHJ
Powerfeeds with Cover	400	.60	JA-400F
PVC	500	1.0	JA-504F
Powerfeeds with Cover	400	.60	JA-400HHF
Lexan	500	1.00	JA-504HHF
Expansion Gap Kit	400	5.0	JA-400XG-4"
PVC	500	6.0	JA-504XG-4"
Expansion Gap Kit	400	5.0	JA-400HHXG-4"
Lexan	500	6.0	JA-504HHXG-4"

PART	AMPS	WT	CAT #
Isolation Joints	ALL	1.0	JA-400IS
End Cap - PVC only	ALL	.08	JA-400N/JA-504N
Hanger Clamps	ALL		
Plated	ALL	.25	JA-400H
Coated	ALL	.30	JA-400HN
Plated with Spool	ALL	.35	JA-400K
Coated with Spool	ALL	.40	JA-400KN
Lexan	ALL	.25	JA-400P
Lexan with Rain Hat	ALL	.30	JA-400PH
Anchor Hangers			
add suffix "A" - All Series			
Collectors			
Crane Rated - Single Head	150	3.0	JA-150L
Crane Rated - Dual Head	300	6.0	JA-150LL
Crane Rated - Single	300	6	JA-200DSHS
Crane Rated - Dual	600	12	JA-400DDSHS

INDUSTRIAL POWER & CONTROL
ENERGY SOLUTIONS FOR CRANES, HOISTS & MONORAILS

Toll Free: 1.888.822.2024 Fax: 1.519.822.2140
Email: info@ipandc.com Web: www.ipandc.com