Notes:

1. Maximum Electrical Current:

AWG	16	14		
AMP	18	30		

2. Maximum Electrical Rating: 150° 600 Volts
3. Terminal Material: Copper
4. Wire Range: 16-14 AWG (1.5-2.5mm²)
5. Terminal Surface Treatment: Tin Plated
6. #10 Stud Size
7. Terminal Thickness: 0.80mm

Standard (Metric)

0.65" (16.5mm)
0.19" (4.8mm)
0.29" (7.4mm)
0.33" (8.5mm)
0.21" (5.3mm)
0.09" (2.3mm)
0.16" (4.1mm)

Tolerances

(Unless Otherwise Specified)

CATEGORY	Non Insulated Ring Terminals	SCALE	4/1
PART #	RNBS2-5	SHEET	1-3
MATERIAL	Tin Plated Copper	PAGE	10F2
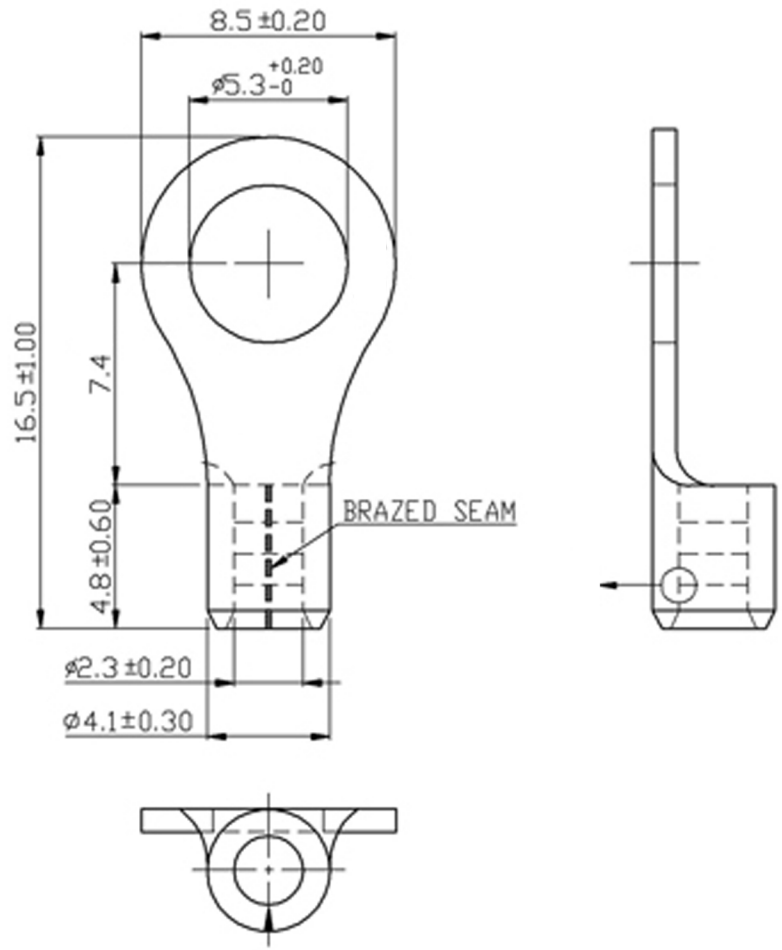
FerrulesDirect