NOTE: *Keep service delivery line lengths equal to a maximum of 2m.

PLEASE NOTE: ANY CHANGES MADE FROM THIS DRAWING LAYOUT OR ITS COMPONENTS WILL VOID THE 'ADR' COMPLIANCE. DO NOT USE ANY LINE LENGTH LONGER THAN THE MAXIMUM SPECIFIED. REFER TO DRAWING 'M004 INSTALL' FOR INSTRUCTIONS.

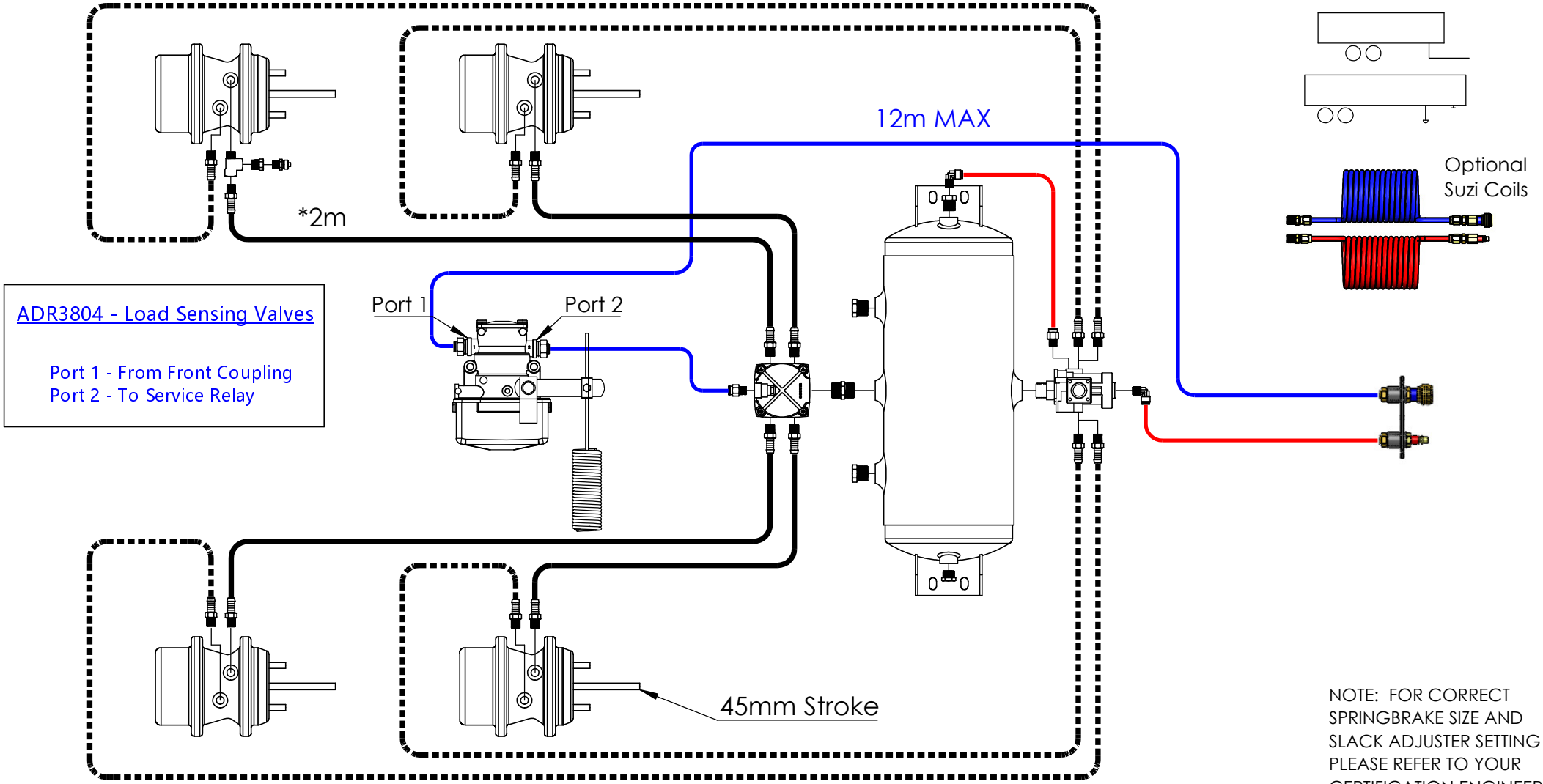

NOTE: FOR CORRECT SPRINGBRAKE SIZE AND SLACK ADJUSTER SETTING PLEASE REFER TO YOUR CERTIFICATION ENGINEER.

Service Line (Ø3/8" Blue Nylon)
Supply Line (Ø3/8" Red Nylon)
Service Delivery (Ø1/2" Black Rubber Hose)
Emergency Delivery (Ø1/2" Black Rubber Hose)

Drawn By: AD	Description: Tandem Mech LSV Brake Kit	TRANSPORT EQUIPMENT AUSTRALIA
Date: 24/04/20	Part No: BKLSV002M	
Revision: 2	SARN: 43133	