VOLANT COOL AIR INTAKES
PART NO.: 415536
INSTALLATION INSTRUCTIONS
WWW.VOLANT.COM
TECH SUPPORT: (909) 481-3888
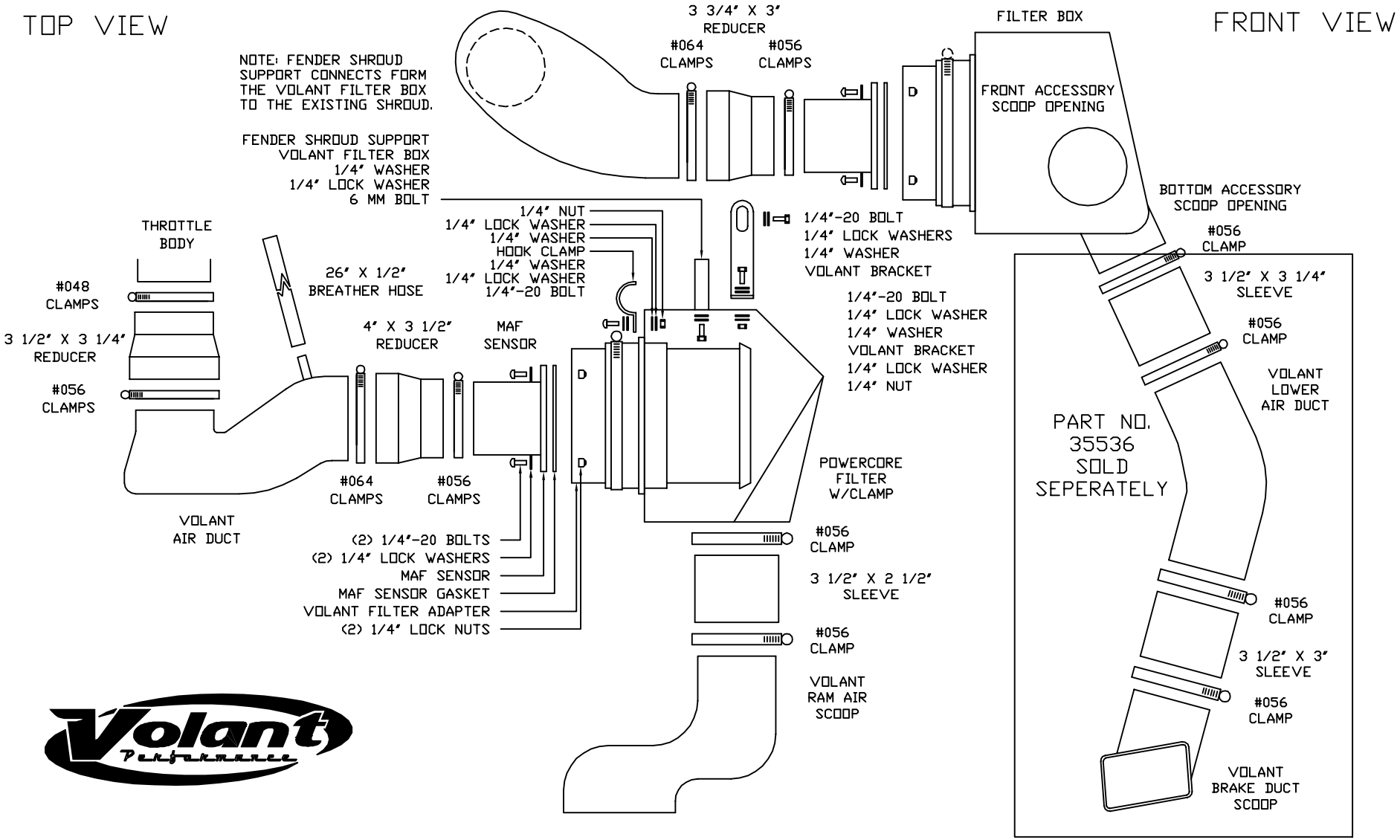
415536 PARTS LIST					
				1	6 MM BOLT
1	VOLANT FILTER BOX	1	4" X 3 1/2" REDUCER	2	1/4" NUT
1	VOLANT FILTER BOX LID	1	3 1/2" X 2 1/2" SLEEVE	2	1/4" LOCK NUTS
1	VOLANT AIR FLOW DUCT	1	3 1/2" X 3 1/4" SLEEVE	8	1/4" LOCK WASHERS
1	VOLANT RAM AIR SCOOP	1	3 1/2" X 3" SLEEVE	5	1/4" WASHERS
1	VOLANT BRAKE DUCT SCOOP	1	#048 CLAMP	1	FENDER SHROUD SUPPORT
1	VOLANT LOWER AIR DUCT	8	#056 CLAMPS	1	VOLANT BRACKET
1	VOLANT FILTER ADAPTER	1	#064 CLAMP	1	MAF SENSOR BRACKET
1	3 1/2" X 3 1/4" REDUCER	5	1/4"-20 BOLTS	1	26" X 1/2" BREATHER HOSE