VOLANT COOL AIR INTAKES
PART NO.: 15946C
INSTALLATION INSTRUCTIONS
WWW.VOLANT.COM
TECH SUPPORT: (909) 481-3888

15946C PARTS LIST
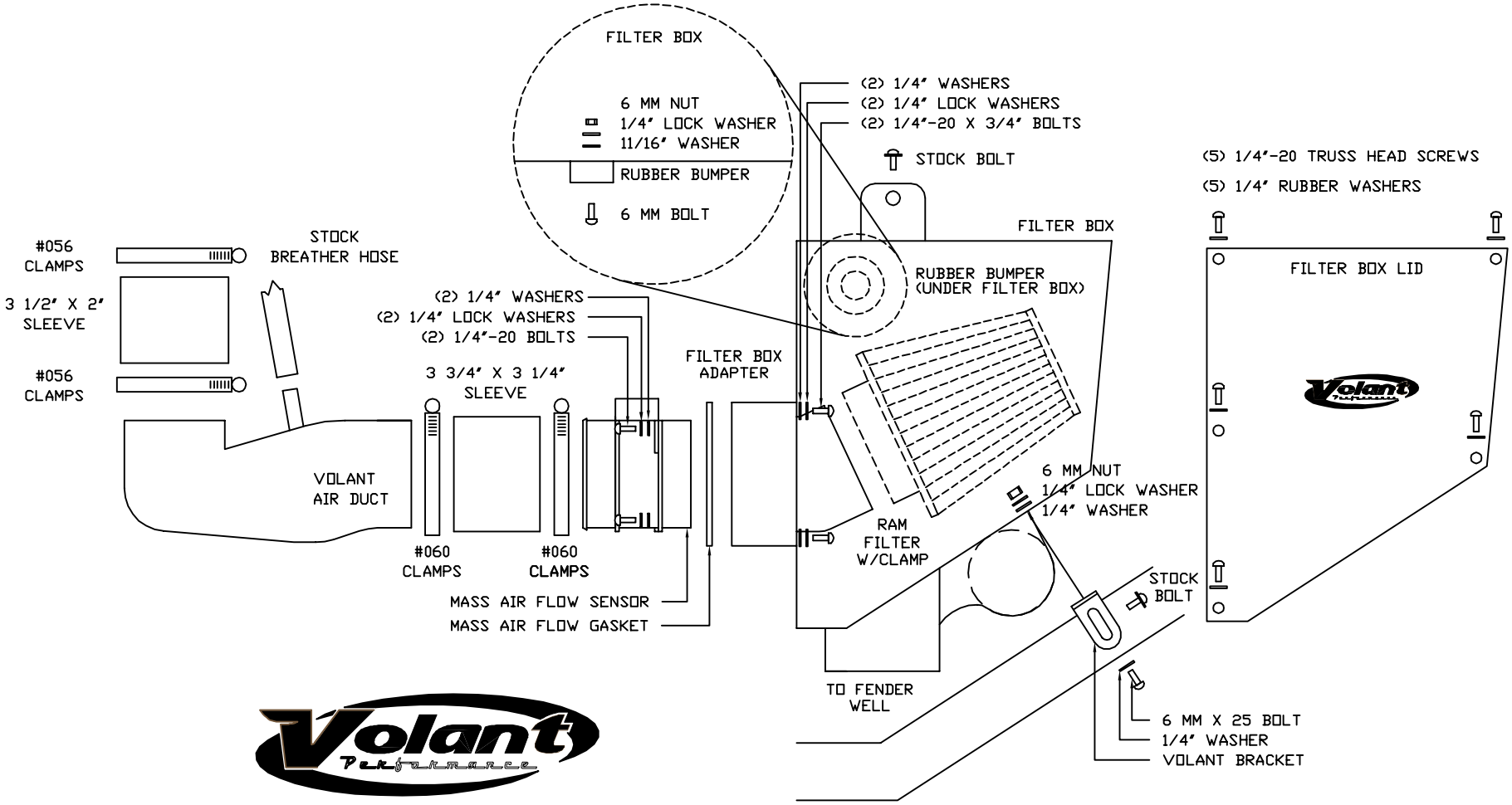
1	FILTER BOX	2	#056 CLAMPS	1	11/16" WASHER
1	FILTER BOX LID	2	#060 CLAMP	2	6 MM X 25 BOLT
1	FILTER BOX ADAPTER	1	3 1/2" X 2" SLEEVE	1	6 MM NUTS
1	VOLANT AIR FLOW DUCT	1	3 3/4" X 3 1/4" SLEEVE	1	RUBBER BUMPER
1	RAM FILTER W/CLAMP	4	1/4"-20 BOLTS	1	3/8" X 17" BREATHER HOSE
5	1/4"-20 TRUSS HEAD SCREWS	8	1/4" WASHERS	1	MASS AIR FLOW GASKET
5	1/4" RUBBER WASHERS	6	1/4" LOCK WASHERS